ADVANCED PROJECTS DESIGN TEAM

SAFIR VISION MISSION

CUSTOMER: ALFRED NASH

REPORT ID #738

LEADER: BOB OBERTO

24 OCTOBER 2004

Jet Propulsion Laboratory, California Institute of Technology.

Clearance CL#05-2360 issued by:

Courtney Young
Document Review Services
Section 274

STUDY PARTICIPANTS

Phones:

Whittington (Secretary):	4-2469
Conference Phone	818-354-6579
FAX to PDC:	818-393-0200

The following representatives comprised the study team:

Subsystem	Name	Phone #	E-Mail
ACS	Ed Litty		Edward.Litty@jpl.nasa.gov
CDS	Vince Randolph		Vince.Randolph@jpl.nasa.gov
Configuration	Enrique Baez	3-6688	Enrique.Baez-Jr@jpl.nasa.gov
Cost	Christopher Swan	4-4133	Christopher.A.Swan-118306@jpl.nasa.gov
Deputy Systems Engineer/ Technical Reviewer	Michael Luna	3-2838	Michael.Luna@jpl.nasa.gov
Documentation	Cynthia Mcclure	3-2511	Cynthia.Mcclure@jpl.nasa.gov
Facilitator*	Oberto Robert	4-5608	Robert.E.Oberto@jpl.nasa.gov
Ground Systems*	Greg Welz	3-4978	Gregory.A.Welz@jpl.nasa.gov
Ground Systems*	Sue Barry		Susan.Barry@jpl.nasa.gov
Mission Design	Rob Haw	4-2567	Robert.J.Haw@jpl.nasa.gov
Power*	Paul Stella		Paul.Stella@jpl.nasa.gov
Programmatics*	Heneghan Cate	4-1279	Cate.Heneghan-100986@jpl.nasa.gov
Propulsion	Paul Woodmansee	4-6904	Paul.R.Woodmansee@jpl.nasa.gov
Science	Smythe William	4-3612	William.D.Smythe@jpl.nasa.gov
Science	James Weiss	4-5420	James.R.Weiss@jpl.nasa.gov
Software*	N. Talbot Brady	4-2557	N.T.Brady@jpl.nasa.gov
Structures	Gerhard Klose	4-8123	Gerhard.J.Klose@jpl.nasa.gov
Systems*	Chris Swan	4-3559	Swan@jpl.nasa.gov
Technology and Risk	Babak Cohanim		Babak.Cohanim@jpl.nasa.gov
Telecom	Ali Ganeh	4-0458	Ali.Ganeh@jpl.nasa.gov
Thermal*	Nick Emis		Nick.Emis@jpl.nasa.gov
Trajectory Visualization	Carnright Robert	4-0839	Robert.C.Carnright@jpl.nasa.gov

TABLE OF CONTENTS

1 EXECUTIVE SUMMARY 4
2 SCIENCE 6
3 INSTRUMENTS 12
4 MISSION DESIGN 13
5 SYSTEMS 23
6 STRUCTURES 31
7 THERMAL 38
8 POWER 42
9 PROPULSION 45
10 ACS 50
11 CDS 53
12 SOFTWARE 59
13 TELECOMMUNICATIONS 66
14 GROUND SYSTEMS 71
15 MISSION ASSURANCE & SAFETY 76
16 COST 86
17 TECHNOLOGY 90

1 EXECUTIVE SUMMARY

SAFIR is a large-aperture cryogenic telescope that will measure very faint signals in the far-infrared and submillimeter wavelengths (20 microns – 1mm). The ten meter deployable telescope optics will be kept at 4K (the focal plane at 0.1 K), which presents a serious technology challenge in the areas of thermal transfer and control. The telescope is mounted behind a solar shield (on the cold side) and the majority of the spacecraft is mounted on the opposite (hot) side. The spacecraft will launch into a Lissajous L2 orbit on a Delta IV 4050H class launch vehicle, which provides the 7743 kg (wet mass, w/contingency) spacecraft a 16% launch vehicle margin. The mission would launch in or around 2020 with a minimum design life of 5 years and a 10 year design life goal (all consumables are sized for a ten year mission).

1.1 MISSION SUMMARY

The focus of this study was to update the design of the SAFIR telescope using current information regarding the James Webb Space Telescope and new cryocooler technology.

The Team X study referenced, but did not review, a Goddard Space Flight Center (GSFC) study on SAFIR performed in 2002.

TABLE 1. KEY MISSION PARAMETERS

Parameter	Value
Launch Date	2020
Technology Cutoff	2013
Mission Design Life	5 year performance floor, 10 year goal
Wet Mass	7747.3 kg (CBE w/cont.)
Dry Mass	7131 kg (CBE w/cont.)
Ground Network	DSN (12m array assumed)
Payload Data Rate	812 kbit/s
Total Data Storage	384 Gbit
Solar Array Area	12.3 m^2
Science Orbit	Lissajous L2 orbit
Payload Mass	5222 kg (CBE w/cont.) – includes solar shield and cyrocooling system
Launch Vehicle	Delta 4050H
Redundancy	Fully redundant with typical waivers
Total Ionizing Dose	25 krad behind 100 mils. AL (RDM 2)
Project Cost	$2.2 -$3.0 Billion (FY05)

The study covered the design of the integrated spacecraft-instrument without examining the details of the individual instruments (e.g. the telescope).

The cameras that are attached to the telescope focal plane and the cryogenic cooling of the focal plane were treated as an allocation.

Designing the telescope with the associated instruments and thermal system represents a level of detail that exceeds the typical Team X study.

It is recommended that the design of the entire telescope subsystem be reviewed and updated by Team I, which specializes in detailed instrument design.

1.2 MISSION TRADES

While subsystem level trades were conducted in many areas, the baseline design was the only mission option studied.

1.3 MISSION TECHNICAL DRIVERS

The main technical drivers of the design were the thermal requirements of the telescope and the overall size of the telescope. These issues compounded each other because the telescope requires a 4K operational temperature over the entire structure, which drove the size of the solar shield and the complexity of the thermal subsystem. Guidance and control of the telescope was also a technical driver but it would not have been an issue without the thermal requirements and the size.

1.4 MISSION COST DRIVERS

The primary cost drivers relate to the thermal control requirements and the size and complexity of the telescope and associated instruments. The telescope estimated cost of $770M (FY05) represents over 30% of the total mission cost and almost 50% of the development costs (w/o reserves and launch vehicle). The thermal control system of $72M (FY05) represents over 25% of the spacecraft bus costs.

1.5 MISSION HERITAGE

The SAFIR mission draws heritage from a variety of current and future observatory telescopes. The current design is very similar to the James Webb Space Telescope and would inherit the design of the solar shield and the deployable optics. The Spitzer Space Telescope would provide some heritage as an infrared telescope and the Herschel and Planck observatories would provide heritage for the infrared detectors. The impact of heritage from any program is muted by the extreme thermal environment that SAFIR requires.

1.6 MISSION TECHNOLOGY

The SAFIR mission will require technological advances in several key areas in order to meet its science requirements. Low temperature, long-life cryocoolers will be required along with technology to transport heat at low temperatures over large distances. The telescope will rely heavily on the development of large aperture, deployable array telescopes, such as those for the James Webb Space Telescope. The instruments mounted on the telescope will also require technology development but Team X did not review this.

1.7 MISSION RISK

The mission risk depends primarily on technology, focused particularly on the thermal requirements. The life of the cryocoolers is a major risk item and will require extensive testing and qualification in addition to the redundancy that is built into the design. Operationally, the telescope must be kept shielded from the sun at all times, as even a brief exposure could damage the instruments and optics and thereby reduce the science return.

2 SCIENCE

2.1 SCIENCE OBJECTIVES

- Study the:
    1) Formation of the first galaxies (evolution of AGNs or active galactic nuclei)
    2) Dynamical and chemical evolution of the stars and galaxies through mid-IR and far-IR emission
    3) Birth of Stars and Planetary Systems
    4) Evolution of Planetary Systems and the Origin of Life
- Questions to be addressed:
    1) When and how did the first stars form?
    2) When did galaxies begin forming, and what is the history of their formation
    3) Galaxy evolution and energy/element production in the universe?
    4) What is the nature of the interaction between black holes and the material in the galaxies that host them?
    5) How do solar systems form?
    6) Which pre-biotic molecules are present in planet-forming regions, and what are their abundances?

2.2 SCIENCE REQUIREMENTS

- SAFIR was recommended in the Decadal Report for technology and concept development that would lead to future infrared missions.
- SAFIR was mentioned prominently in current Structure and Evolution of the Universe and Origins Theme Roadmaps.
- SAFIR will resolve the far IR background and trace star formation to $z > 5$
    - Probe the earliest epochs of metal enrichment
    - Track the chemistry of life in the warm cosmos
    - Identify nascent solar systems from debris disk structure

2.3 MEASUREMENT OBJECTIVES

- Formation of the first galaxies (evolution of AGNs or active galactic nuclei)
    1) Detect H2 lines at 17 & 28.2 µm at redshifts up to Z ~20 (early cloud collapse) with line strength of 10^{-23} W/m2
    2) Determine energy spectrum of the dust emission at long wavelengths for $L > 10^{11} L_{sun}$ in order to discriminate between AGN and Starburst phenomena.
    3) Detect mid-IR fine structure lines to probe the ionization level and elemental abundances. Strengths are only $\sim 10^{-21}$ W/m^2 at Z = 5.
    4) Achieve sufficient spatial resolution to distinguish between galaxies and probe their morphologies in the early universe. The confusion limit at 60µm sets requirement of about 2" resolution.
- Study (dynamical and chemical) evolution of the stars and galaxies through mid-IR and far-IR emission.
    1) Determine reddening corrections for highly redshifted objects.
    2) Measure star formation rate at high Z by total bolometric luminosity.
    3) Determine evolution of PAH emission at $1 \leq z \leq 5$.
    4) Detect dust from L* galaxies out to Z=5.
    5) Confusion noise low enough to see dust emission at Z=5 for L* galaxies.
    6) Diagnose the chemical evolution of galaxies with light metal tracers such as the 158µm line of C+, the 122µm & 205µm lines of N+.
- Birth of Stars and Planetary Systems
    1) Provide imaging of debris disks around young stars with resolution of 100AU at 100pc at 40µm.
    2) Trace gas cooling of collapsing protostellar clouds using H_2O (25-180µm), O (63µm and 145µm) and CO J>6 (170-520µm).
    3) Observe infall/outflow from collapsing clouds
- Evolution of Planetary Systems and the Origin of Life
    1) Detect KBOs; measure albedo and temperature

2) Study mineralogy of nearby debris disks

2.4 SCIENCE TRACEABILITY

A science traceability matrix was generated based on input available during the study. The matrix appears below, along with the NASA exploration Roadmap.

TABLE 2. SOLAR SYSTEM EXPLORATION DIRECTIVES

NASA Origins Roadmaps 2003	
Research Area	Investigations
1. How did the cosmic web of matter organize into the first stars and galaxies?	3. Formation and evolution of galaxies
2. How do different galactic ecosystems (of stars and gas) form and which can lead to planets and living organisms?	4. Lifecycle of stars in the Milky Way and other galaxies
	5. Habitats for life in the Milky Way and other galaxies
3. How do gas and dust become stars and planets?	6. Molecular clouds as cradles for star and planet formation
	7. Emergence of stellar systems
	8. Evolution of protoplanetary dust and gas disk into planetary systems
4. Are there planetary systems around other stars and how do their architectures and evolution compare with our own solar system?	9. Evidence of planets in disk around young stars
	10. Census of planetary systems around stars of all ages

Mission Objectives :	Study the formation of structures, from the first stars and galaxies in the distant universe to planetary systems around nearby stars with unprecendented sensitivy at far-IR and submillimeter wavelengths.

TABLE 3. MISSION SCIENCE TRACEABILITY MATRIX

Science Objectives	Measurement Objectives	Instrument Requirement	Instrument	Mission Requirements	Spacecraft Requirements	Data Products
Formation of the first galaxies	1. Detect H2 lines at 17 & 28.2 µm at redshifts up to z~20 (early cloud collapse) with line strength of 10^-23 W/m2	1. Line strength requires telescope diameter of ~10m and temperature ~4K	HRS	**Orbit:**Located in thermally stable orbit such as L2; **Duration**: 5 year minimum lifetime, 10 year design lifetime; **Observation mode:** include both pointed observations and slow slew scans	**Pointing:** Absolute pointing control of telescope to within 0.3" (3σ) over a period of 10K seconds. Pointing knowledge of telescope to within 0.1" (1σ); Coarse pointing of spacecraft : 4 arcmin (3σ) for both control and knowledge; Slew rate~ 90deg in 1 hour; No delta-V disturbance on telescope (no deSat) during 11 days. **Telescope:** ~10m aperture diameter; diffraction limited at greater than 40 microns; Temperature of telescope <=4K in order to yield optimum sensitivity for spectroscopy). Sufficient low stray light to avoid increasin the overall backgroud above dar sky levels; Field of regard of order steradian.	spectrums and multi-band images of selected targets;
		2. Spectroscopy of R~1000 at 20-600µm				
		3. Broadband-tunable spectroscopy a necessity.				
	2. Determine energy spectrum of the dust emission at long wavelengths for L>10^11 L_sun in order to discriminate between AGN and Starburst phenomena.	4. Strength is ~10µJy at 100µm, so confusion limit should be below this; this requires ~3" resolution at 100µm, hence a diameter ~10m.	LRS			
	3. Detect mid-IR fine structure lines to probe the ionization level and elemental abundances.	5. Line strength requires >3m to detect at 10s	HRS			
		6. Spectroscopy of R~3000 at 25-100µm				
	4. Achieve sufficient spatial resolution to distinguish between galaxies and probe their morphologies in the early universe. The confusion limit at 60µm sets requirement of about 2" resolution.	7. Diameter >10m; diffraction limited at l>60µm	CAM			
Study evolution of the stars and galaxies through mid-IR and far-IR emission	1. Determine reddening corrections for highly redshifted objects	1. Broadband spectroscopy for 20-100µm	LRS			
	2. Measure star formation rate at high z by total bolometric luminosity.	2. Wide field imaging at (60-600)µm	CAM			
	3. Determine evolution of PAH emission at 1<=z<=5	3. Requires a low-resolution (R~50) spectrometer covering 20-100µm.	LRS			
	4. Detect dust from L* galaxies out to z=5.	4. Field of view >1' on a side.	LRS			
		5. Sensitivity requirement can be met with ~10m diameter				
	5. Confusion noise low enough to see dust emission at Z=5 for L* galaxies	6. require ~10m diameter, wavelength insensitive	LRS			
		7. To maximize the sensitivity in spectroscopy, telescope must be ~4K.				
	6. Diagnose the chemical evolution of galaxies with light metal tracers such as the 158µm line of C+, the 122µm & 205µm lines of N+.	1. Requires R~3000 spectroscopy for 100<L<800µm.	HRS			
		2. Field of view >1'				
Birth of Stars and Planetary Systems	1. Provide imaging of debris disks around young stars with resolution of 100AU at 100pc at 40µm.	1. Resolution implies diameter ~10m, diffraction-limited at 40µm.	CAM			
		2. Mid-IR imaging camera with 1" resolution, 1 FOV				
	2. Trace gas cooling of collapsing protostellar clouds using H2O (25-180µm), O (63µm and 145µm) and CO J>6 (170-520µm).	3. High resolution (R>10,000 or 30km/s) spectroscopy covering 20-600µm.	HET			
	3. Observe infall/outflow from collapsing clouds	4. Resolution at R~100,000 (3km/s).				
Evolution of Planetary Systems and the Origin of Life	1. Detect KBOs; measure albedo and temperature	1. Broadband, wide-field imaging at 60-200µm. Wide field ought to be >1 at diffraction-limited resolution.	CAM			
	2. Study mineralogy of nearby debris disks	2. 20-35µm spectroscopy at ~1" resolution; R~200	LRS			

2.5 DATA VOLUMES

The maximum daily volume will be 70 Gbytes per day.

2.6 SCIENCE TRADES

2.6.1 WaFIRS vs. FTS spectrometer architectures

The most efficient, compact spectrometer architectures need to be determined.

2.6.2 Ge vs. Si BiB photoconductors

These photoconductors are large (103-104) arrays with ~10-20 W-Hz-1/2 semi- and superconducting (TES) bolos. They are Ge, Si BiB photoconductors.

2.6.3 Quantum noise-limited heterodyne spectrometers

Such a system requires low pump power mixers and low noise cryo-IF amplifiers. These details need to be evaluated and traded to ensure they are quantum noise-limited.

2.6.4 Low power dissipation and thermally isolated focal plane arrays and instruments

There must not be any thermal gradients that can affect the thermal operation of the telescope. Therefore, it is necessary to optimize cryogenic multiplexers (e.g. NIST time-division, SCUBA-2) and cryogenic amplifiers to achieve the above.

2.6.5 Cryogenic, deployable large apertures

The actuators, latches, hinges and shades for a cryogenic, deployable aperture must be studied in more detail. These components must be tested for operability in a low-temperature system and validated for a zero-g environment. The deployable aperture should be designed with a low area density (kg/m^2) using low cost ($/m^2) mirror substrates that are stiff and easily finished surfaces.

2.6.6 Optimized background reduction strategies

Appropriate shielding architectures will need to be designed to accommodate scattered light management. The shields should be low emissivity designs. The off-axis properties and optimal coatings for such designs remain to be determined.

In addition, the insulation for a large aperture must accommodate the required field of view.

(lissajous L2?, drift-away?, out of ecliptic?, trans-Jupiter?) The characteristics of the operational orbit should be further refined and optimized.

2.6.7 Cryocoolers

Alternative shield cooling technologies should be investigated (e.g. gas flow, capillary technologies)

If the cooling for the ACTDP extension (100mW @ 4K) cannot be kept stable, the necessary science measurements cannot be obtained.

2.7 Planetary Protection

There are no planetary protection requirements for this mission concept

2.8 Technology

- Lower frequency telescope to spacecraft/sunshield adapting, thermal decoupling and momentum balancing over very wide fields of regard
- Ultra stable deployment and latching stability for deployment precision and stability
- Telescoping boom deployment/latching
- Robust sunshield design for expanded observatory needs
- Autonomous docking and robotic assembly techniques for continuous growth.

Table 4. Science Technology Overview

Subsystem	Technology Type	Metrics (Performance measurement)	TRL	Criticality (Mission Critical, Enabling, Enhancing)	Comments
Science	Sunshade	Maintain constant temperature on telescope, provide shielding from	3	Enabling	On the Carrier spacecraft. The primary benefit is that the

		stray light			technology is enabling. The disadvantage is size. The heritage is from Spitzer.
	10m aperture	Throughput Diffraction Limit	4		On the telescope. The main disadvantage is volume and mass. Telescope optics. The heritage is ST.
	Mirror Surface Control	Focus	4		On the telescope. The main disadvantage is that active control is required. The heritage is NGST.
	Mirror Material	Mass reduction	3		On the telescope. The main disadvantage is that X Performance Provider. The heritage is NGST.
	Optical design	Fine Pointing correction	4		On the telescope. The main disadvantage is that off-axis, active control is needed. The heritage is NGST.
	Detectors – Large format IR	Increased measurement fidelity (resolution, data quality)	2	Enabling	On the telescope. The main disadvantage is that this is a new technology with high risk and high sensitivity requirements.
	Telescope Deployment and Latching Stability	Extremely high mechanical rigidity/stability (absolutely no movement)	4	Enhancing	Current systems can provide latching mechanisms at reduced stability
	Autonomous Docking & Robotic Assembly	Reduced cost, risk with regard to manned assembly	4	Enhancing	

2.9 RISK

Instruments: complex camera and three IR spectrometers

Concerns:

- Thermal (new unproven approach and technology)
    - Maintaining stable temperature during measurements may be an issue for the following reasons.
        - Large thermal load
        - Requires lots of power to maintain
    - Maintaining 0.1K for all instrument focal planes
    - Coordinating with thermal shields
    - Mechanical cooler technology
    - Continuous Adiabatic Demagnetization Refrigerator (ADR)
    - Turbo-Brayton coolers
- Mounting, structures, and interdependencies
    - Interface between the payload and spacecraft
    - Complex movements and deployments, requires unique mechanical attachment techniques
    - Structure too large to test prior to launch
- Dependence on NGST success and reliance on NGST analysis
- Coordination/complexity of measurements
    - Spacecraft jitter control
    - Measurement durations
    - Interdependence between measurements
- Sun shield
    - Deployment and deployed support structure
    - Stability of deployed structure (unsupported thin film exposed 5-10 years)
    - Thermal properties after deployment
    - Desirability for low absorptance coating on a durable material has necessitated coating material development program
    - Sunshade sun side layer has specific coating/material issues
        - Teflon film not recommended for long duration space missions due to degradation of MLI outer layers on HST
- Pointing constraints
    - Constraints are very challenging (few arc seconds)
    - Scan rates need to be very slow to minimize the settling time. First the spacecraft should be pointed and then instrument fine pointing would follow.
    - Long duration measurements at arc second constraints will be very difficult for the spacecraft to maintain. In other words, the spacecraft cannot tolerate significant jitter.
- Detector technology not yet flown - Low TRLs

2.10 COST

Not required for this study

3 INSTRUMENTS

The instruments were treated as a black box and therefore no detailed information was provided.

4 MISSION DESIGN

4.1 DESIGN REQUIREMENTS

- Trajectory: The spacecraft must carry its telescope payload to a Lissajous orbit about the Sun-Earth L2 point.
- Launch Date: 2020
- The spacecraft telescope optics must not receive any incident or reflected radiation from the Sun, Earth or Moon.
- The spacecraft must remain pointed in the anti-sun direction for operation of the cryogenic telescope.
- Delta V: The spacecraft must minimize total ΔV.
- Mission Duration: the spacecraft/instrument design life is 5 years; the propellant is sized for 10 year operation.
- Planetary Protection: There are no planetary protection requirements.

4.2 DESIGN ASSUMPTIONS

- Trajectory: The trajectory characteristics are similar to that use on the James Webb Space Telescope (JWST).
- The assumed spacecraft mass ranges from 5000-8000 kg.

4.3 DESIGN

The spacecraft is launched in June 2020 on a direct trajectory to the L2 point. The L2 point is located 1,500,000 km from the Earth in the anti-Sun direction (~4 Moon orbit radii). The hyperbolic excess energy (C_3) needed to reach L2 is –0.7 km^2/s^2. A massive spacecraft (6000 – 9400 kg) will require a Delta 4050H-19 ("Delta IV Heavy") launch vehicle. If the total spacecraft mass can be constrained to less than 6000 kg, then an Atlas V-541 will suffice.

The trip-time for the baseline trajectory from launch until L2 orbit insertion is 2 months. Traveling to L2 is not constrained by geometry and nearly equivalent launch opportunities occur every month.

This mission is described as Class A/B for costing purposes. Staffing during the development part of this mission (phases A-D) is estimated to be as follows: A – 2.5 FTEs, B – 4 FTEs, C/D – 4.5 FTEs.

4.3.1 MISSION TRAJECTORY

TABLE 5. MISSION TRAJECTORY PARAMETERS

Parameter	Unit	Value
Target or Destination	-	Sun-Earth L2
Mission type	-	L2 orbiter
Cruise Approach Duration	months	2 (63 days)
Cruise Return Duration	months	NA
Total mission duration	months	60 baseline (5 years); 120 (10 years) goal
Maximum spacecraft/sun distance	AU	1.01 AU
Maximum earth/spacecraft range	AU	0.01 (1,537,500 km)
Delivery Trajectory type		Direct trajectory
Fly-by/Gravity Assist Body		N/A
Propulsion Type		chemical

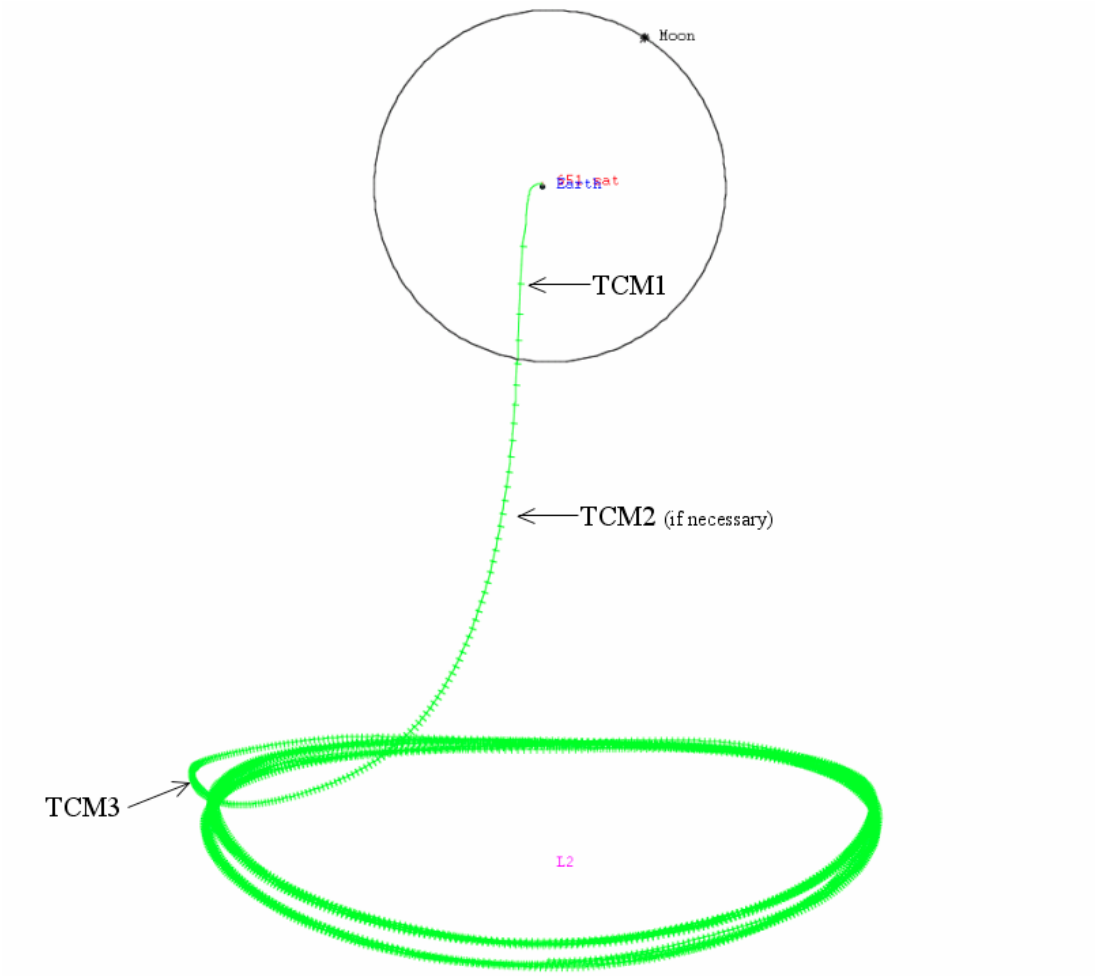

FIGURE 1. SAFIR TRAJECTORY: ECLIPTIC POLE VIEW (ECLIPTIC X-Y PLANE). TICS ARE EVERY 12 HOURS.

L2 ORBIT DIAMTER = 1,500,000 KM (LONG AXIS)

4.3.2 LAUNCH

TABLE 6. LAUNCH PARAMETERS

Parameter	Unit	Value
Launch date/window	Mm/dd/yy	June 2020
Arrival date/window	Mm/dd/yy	August 2020
Departure date/window	Mm/dd/yy	N/A
Launch energy C_3	Km^2/s^2	-0.7
L2 arrival velocity (wrt Earth)	Km/s	0.25
Launch vehicle	-	Delta 4050H-19
Launch vehicle capability	kg	9400
Spacecraft launch mass	Kg	7650
Launch margin	%	17

4.3.3 MISSION ORBIT

The baseline Lissajous orbit around L2 has semi-major axis equal to 750,000 km and a semi-minor axis equal to 350,000 km. A view of the orbit looking along the Zaxis is shown in Figure 1. The period of this orbit is 6 months.

Views of this orbit looking along other coordinate axes are provided in the following graphics. Other orbits were considered during this study; they are discussed in the Trades section. Note that the orbit is oriented 45 degrees to the ecliptic plane. This is a feature of Lissajous orbits at L2.

Two key requirements affect the spacecraft's orbit during operations at L2: 1) the spacecraft's cryogenic telescope must always remain pointed away from the sun; 2) the telescope must not be exposed to any reflected light from the Earth or moon. Given these constraints, it becomes necessary to understand the variation in the Moon-spacecraft-Earth and Sun-spacecraft-Earth angles during the L2 orbit.

Relevant angle measures for the baseline orbit are shown in Figure 2. This figure depicts the Sun, Earth and Moon angles with respect to SAFIR; note that 702 in the figure denotes the SAFIR spacecraft. Angles for the other traded orbits are shown in the Trades section.

TABLE 7. MISSION ORBIT PARAMETERS

Parameter	Unit	Value
Semi-major axis, a	km	N/A
Semi-minor axis, b	km	N/A
X-amplitude	km	750,000
Y-amplitude	km	350,000
Eccentricity	-	N/A
Orbit Periapsis	km	N/A
Orbit Apoapsis	km	N/A
"Inclination"	deg	45 (with respect to the ecliptic)
Orbit period	hr	4320 (6 months)
Orbit type	-	Lissajous L2 orbit
Approach Flight Path Angle	-	N/A

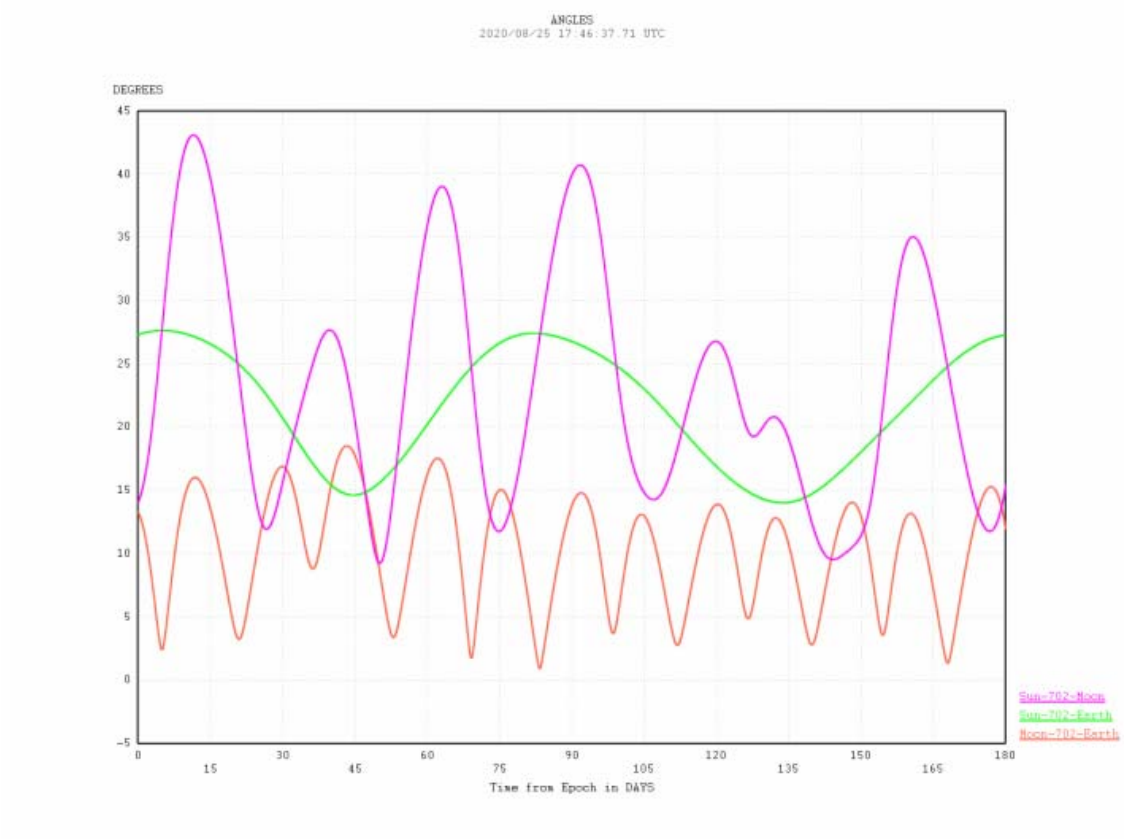

FIGURE 2. LISSAJOUS ANGLES FOR BASELINE ORBIT, X-AMPLITUDE (DIAMETER) = 750,000 KM

FIGURE 3. SAFIR ORBIT EDGE-ON VIEW (ECLIPTIC Y-Z PLANE). MOON'S ORBIT ALSO SHOWN.

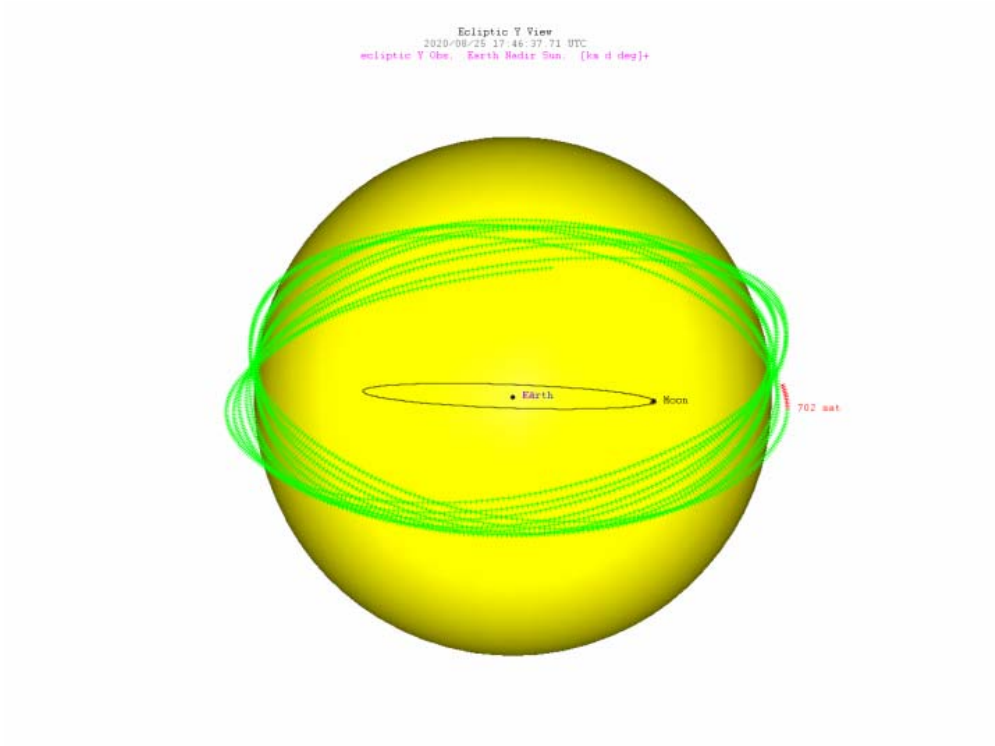

FIGURE 4. SAFIR ORBIT FACE-ON VIEW (ECLIPTIC X-Z PLANE, ALONG EARTH-SUN LINE)

4.3.4 ENTRY, DESCENT AND LANDING

Not applicable.

4.3.5 MISSION DISPOSAL

For the short-term future the spacecraft will remain near the L2 point, but the orbit is unstable without maintenance and the longevity of the orbit is still to be determined. The spacecraft will eventually enter a classical heliospheric orbit. It is not anticipated that this will have any impact on other spacecraft not in orbit around L2.

4.3.6 SPACE ENVIRONMENT

The space environment at the Sun-Earth L2 is less hostile compared to a geosynchronous Earth orbit and does not undergo significant variation during Earth's orbit about the sun.

- Total radiation dosage: At L2, the spacecraft will experience a total radiation dosage of 25 krad, which will be shielded behind 100 mils of aluminum (with a radiation dose margin of 2).
- Reflected Light: Since the telescope must not be exposed to any reflected light from the Earth or moon, it is necessary to understand the variation in the Moon-spacecraft-Earth and Sun-spacecraft-Earth angles during the L2 orbit.
- Temperature extremes: As the spacecraft is in a 750,000km X 350,000 km Lissajous orbit at L2 (1.5 million km from Earth), the distance from the Sun (and Earth) will vary. However, during this halo orbit, the solar energy flux will be fairly constant and approximately the same as at Earth. There is a slight variation in thermal environment of +-3% due to the ellipticity of the Earth's orbit.
- Micrometeoroids: According to standard prediction models, micrometeoroid impact flux at L2 is approximately 162 impacts/m^2/yr for particles 0.4mm in diameter.
- Plasmas: At L2, the primary source of plasma is the solar wind, essentially a neutral (or cold) plasma consisting of 95% hydrogen ions, 5% helium ions, and electrons. The expected particle density is 1-10 particles per cm^3. As the kinetic energy of these particles is relatively small, the risk to charging spacecraft surfaces is low.

- Solar radiation pressure: At 1AU, the solar radiation pressure is $9x10^{-6}$ N/m^2 and will be approximately the same at L2 (1.01 AU). As the Sun Shade on the spacecraft is 13m x 28m, the solar radiation torque will be minor.
- Gravitational effects: Some small second order perturbation will be caused by the Earth and moon.

4.3.7 MISSION EVENTS

After launch in June 2020, the booster stage on the spacecraft injects it into a direct trajectory to the L2 point. The booster is jettisoned shortly after burn out. Injection errors can be corrected shortly after launch with the first trajectory correction maneuver (TCM1). A second TCM is scheduled about 1 week later. The spacecraft cruises for 63 days until it reaches the L2 insertion point, which is ~1,500,000 km from Earth. At this juncture, the spacecraft performs an insertion burn to place it into orbit about the L2 point (L2OI). Orbit maintenance will be required after L2OI.

TABLE 8. MISSION EVENTS

Event	Date (mm/dd/yy) or (Event +- X days)	Duration
Launch/Cruise Trajectory Injection	June 2020	< 10 min
TCM1	Launch + (12hr – 2 d), 1 day nominal	
TCM2	Launch + 7 days	
TCM3 (L2 orbit insertion)	Launch + 63 days	
End of Nominal Science Mission	Launch + 5 years	NA
End of Extended Mission Goal	Launch + 10 years	NA

4.3.8 ΔV REQUIREMENTS

During cruise there will be 2 or 3 trajectory correction maneuvers. These are listed in Table 5. TCM1 is a critical maneuver and must occur in order to reach L2 (i.e. if the injection is less than perfect). TCM2 is held as a contingency in case TCM1 is in some way deficient. TCM3 is the L2 orbit insertion burn, requiring a ΔV burn of 14 cm/s. In total, 175 m/s is budgeted for all necessary maneuvers.

Note that TCM2 is not intended to compensate for an outright aborted TCM1. In that case a replacement maneuver must be performed within ~3 days from the nominal TCM1 time. The longer the maneuver is delayed, the more expensive it becomes. After ~4 days the ΔV reaches several hundreds of meters per second. So a risk to mission success is associated with missing TCM1, although contingency preparation can mitigate the risk.

For comparison, the Genesis spacecraft was launched on a Delta II. In this case, the pre-launch estimated magnitude for TCM1 was 31+/-20 m/s but the magnitude actually needed to correct the injection errors was only 5 m/s.

TABLE 9. MANEUVER DELTA V BUDGET

Manuever	Date	Mean (m/s)	1σ	3σ	Budgeted ΔV
TCM1 (10% increase over Genesis values)	Launch + 1 day	34	22	66	100
TCM2	Launch + 7 days	-	5	15	15

TCM3	Launch + 63 days	0.14	0.1	0.3	10
Orbit maintenance	L2 orbit insertion to 10 years	-	-	-	50
Total	**-**	**34.1**	**27.1**	**81.3**	**175**

As noted previously, other orbit trades were conducted. A table summarizing the ΔV budget for the alternate orbit cases is shown below.

TABLE 10. ΔV TRADES FOR SEVERAL L2 ORBITS

Case	X-amplitude	□□□□□ ΔV
Units	km	m/s
Baseline	750,000	175
Larger Orbit	1,000,000	175
Smaller Orbit	300,000	~300

4.4 TRADES

4.4.1 SMALL L2 ORBIT SIZE VS. LARGE L2 ORBIT SIZE

During the study, several trajectories to the Sun-Earth L2 point were considered. In addition to the baseline orbit, two other orbit scenarios were investigated:

- A larger Lissajous orbit with X-amplitude = 1,000,000 km.
- A smaller Lissajous orbit with X-amplitude = 300,000 km.

The larger Lissajous orbit will have a ΔV budget equivalent to the baseline case (175 m/s). The smaller Lissajous orbit will need substantially more ΔV for insertion. In general, small orbits are expensive for L2 orbit insertion (300,000 km is a small orbit for L2). Thus the ΔV budget may increase by 100 – 150 m/s for the small L2 orbit (estimated).

Figure 2 depicts the angles for the baseline orbit with X-amplitude = 750,000 km. Figure 5 represents angles for a larger Lissajous orbit around L2 (X = 1,000,000 km) and Figure 6 represents angles for a smaller Lissajous orbit (X = 300,000 km). The pointing of the spacecraft with respect to the Sun, moon or earth must remain less than the angles shown in the plot below.

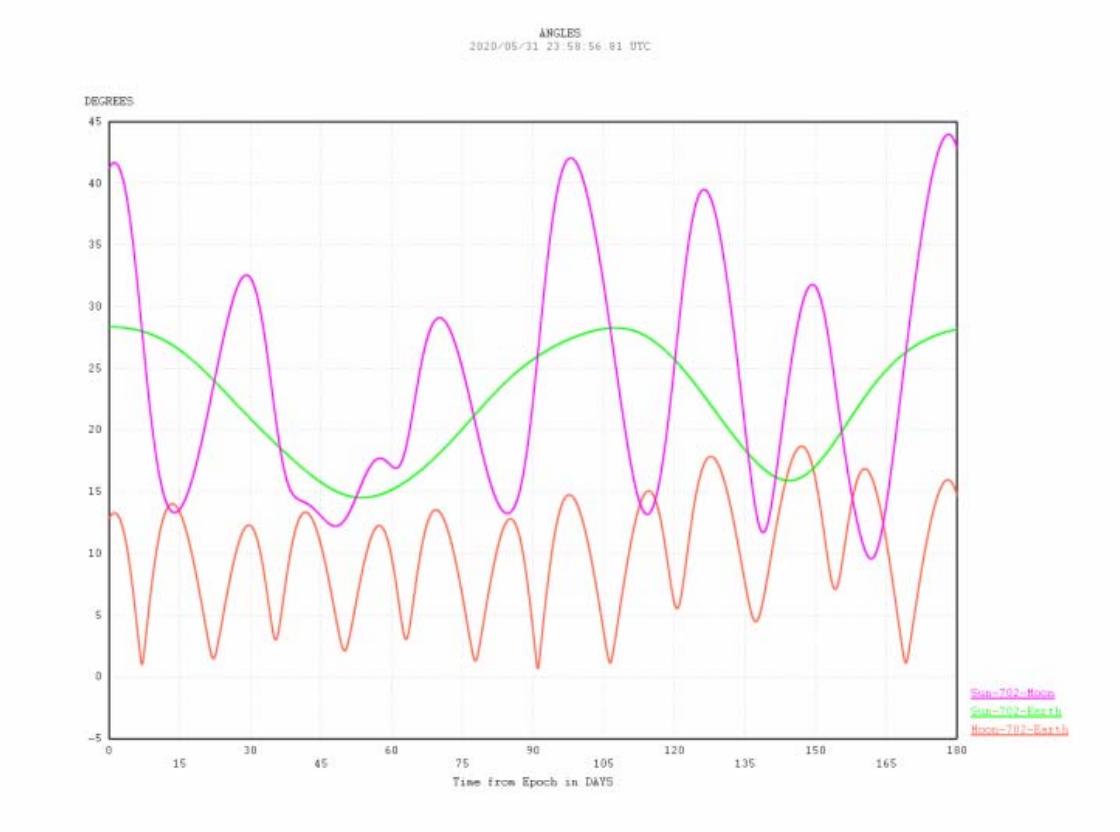

FIGURE 5. LISSAJOUS ANGLES FOR X-AMPLITUDE = 1,000,000 KM

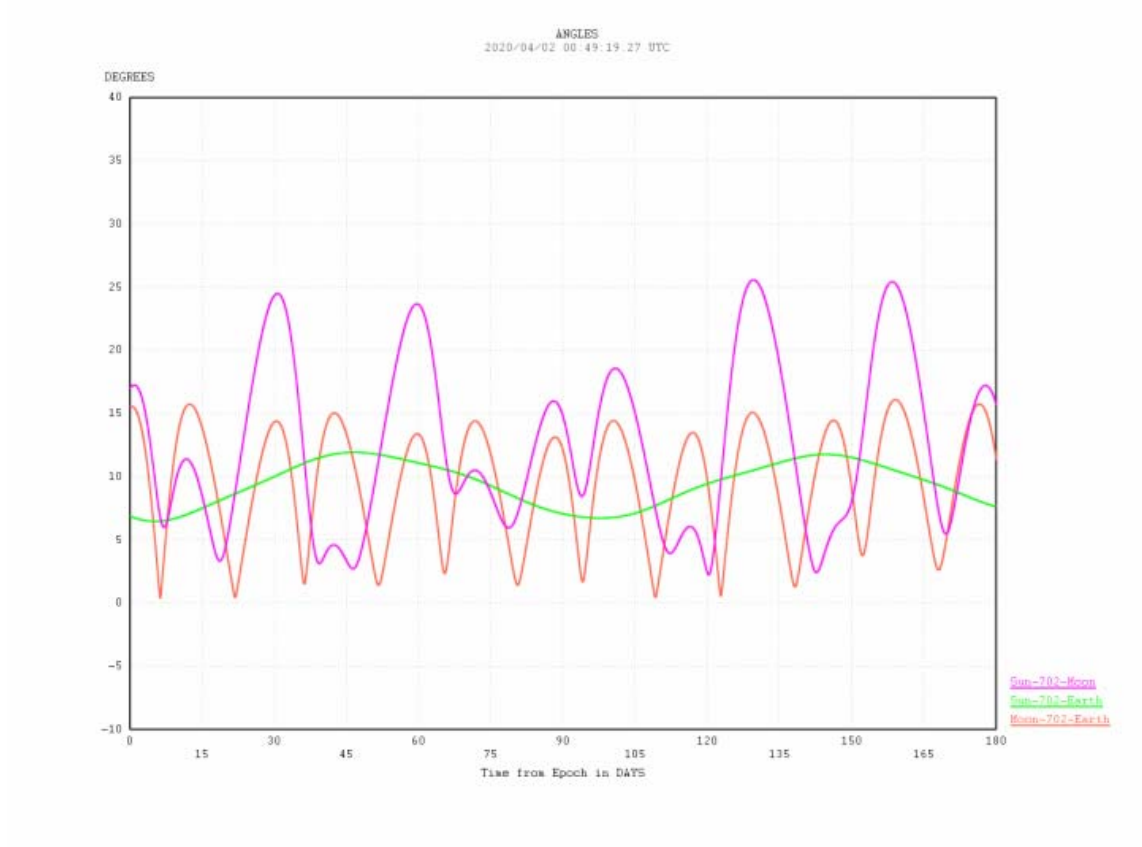

FIGURE 6. LISSAJOUS ANGLES FOR X-AMPLITUDE = 300,000 KM

4.5 TECHNOLOGY

TABLE 11. MISSION DESIGN TECHNOLOGY OVERVIEW

Subsystem	Technology Type	Metrics (Performance measurement)	TRL	Criticality (Mission Critical, Enabling, Enhancing)	Comments
Mission Design	NA	NA	NA	NA	NA

4.6 PLANETARY PROTECTION

Not applicable.

4.7 RISK

- A risk to mission success is associated with missing TCM1.
- A risk to mission success is failure of the L2 orbit insertion burn (TCM3).

5 SYSTEMS

5.1 DESIGN REQUIREMENTS

- Mission Lifetime: The nominal design life of the spacecraft and instrument is 5 years with a goal of 10 years. Consumables are sized for 10 years.
- Redundancy: The spacecraft is fully redundant (with usual waivers, i.e. main engine, etc).
- Heritage: SAFIR draws a great deal of potential heritage and design similarity to the current design of the James Webb Space Telescope (JWST). Other (lesser) sources of heritage include the Spitzer Space Telescope, Herschel, and Planck.
- Mission Class: This is a class "A" mission according to JPL mission classifications (D-1489).
- Technology: SAFIR requires technology development in the areas of low temperature, long life cryocoolers, thermal transport, low temperature mechanisms and materials, and large aperture optics.
- Radiation dosage: The mission total radiation dose for the mission life requirement is 25 krad behind 100 mils of aluminum with an RDM of 2.
- Pointing:
    - The telescope requires one arcsec (3σ) pointing knowledge with 0.001 arcsec/sec pointing stability.
    - The telescope must remain pointed in the anti-sun direction.
    - The telescope optics must not receive any incident radiation from the Earth or the Moon.
- Thermal: SAFIR requires that the focal plane of the telescope stay at or below 0.1K, the telescope optics must stay at or below 4K, and all other equipment on the cold side of the sun shield must stay below 15K.
- Previous studies: The customer provided a previous study performed at Goddard Space Flight Center's Integrated Mission Design Center (IMDC) in July of 2002. This study was used only as reference by the design team.

5.2 DESIGN ASSUMPTIONS

- Telescope contains fine steering mirror and internal star camera functionality to meet the pointing and stability requirements.
    - It is assumed that the spacecraft needs to provide point control of 30 arcsec (3σ), pointing knowledge of 15 arcsec (3σ), and point stability of 0.1 arcsec/sec.
    - The Team X design assumes that this hardware is part of the instrument and did not include it in the spacecraft.
- The focal plane cooling apparatus was defined as part of the payload and assumed that the very low focal plane cooling (0.1K) was integrated into the payload package.
- The mass of the telescope structure was assumed to be based on the JWST design and scaled accordingly.
    - The customer requested Team X to use an allocation of 3120 kg for the primary telescope structure. This was loosely based on the specific mass of the JWST telescope of 40 kg/m^2 but is not an exact scaling.
    - This translates into a mass estimate of 2400 kg (CBE) which translates to the 3120 kg allocation once 30% mass contingency is added.
- 20 kg was allocated for RCS propellant to unload the reaction wheels.
- The cryo cooler system was not assumed to operate during safe mode.
- Launch Date: Assumed to be June 2020
- Team X did not assume any inherited parts or software for this mission.
- Technology cutoff: Required technology developments are assumed to be completed by 2013 (Phase B).

5.3 DESIGN

SAFIR is a large-aperture cryogenic telescope that will measure very faint signals in the far-infrared and submillimeter wavelengths (20 microns – 1mm). The current design focuses on the spacecraft's instrument payload: a cryogenic telescope with a 10-meter single primary deployable mirror mounted behind a large V-groove radiating solar shield. The main spacecraft bus is mounted on the side of the shield opposite the telescope. The bus contains four large cryocoolers to cool the telescope optics and the cold

side of the shield. The telescope houses four types of detectors with their associated electronics: an infrared (wide spectral band) camera; a low resolution spectrometer (LRS); high resolution spectrometer (HRS); and a heterodyne spectrometer (HET).

Attitude control presents a challenge because of the large size of the telescope compared with the pointing knowledge and stability control requirements. The spacecraft provides attitude control using a combination of reaction wheels, star cameras and an inertial measurement unit (IMU). The spacecraft attitude and control systems provide course pointing and stability to the telescope which uses an integral fine guidance sensor and steering mirror to achieve the knowledge and stability requirements.

The spacecraft main body is mounted on the warm side of the solar shield where it houses all the typical spacecraft functionality. Two 6.25 m^2 solar arrays provide the necessary 3358 W (EOL) to run the cryocoolers while a RAD750 microprocessor provides the necessary computing power for both the telescope and the spacecraft. The propulsion subsystem is a simple blowdown hydrazine monoprollent system and includes four main (5N) and twelve reaction control system (0.9N) engines.

The spacecraft will launch into a Lissajous L2 orbit on a Delta IV 4050H class launch vehicle, which provides the 7648 kg (wet mass, w/contingency) spacecraft a 17% launch vehicle margin. Once in its operational orbit, the spacecraft will properly orient itself, shielding the telescope from the sun, and begin cooling the optics to the required cryogenic temperatures. Once thermal stability at these temperatures is achieved, the four science instruments will begin near continuous operation (two instruments at a time). It should be noted that the spacecraft power system is sized to support operation of all instruments at the same time (3327.8 W). However, this scenario would rarely occur due to interference between instruments. This near continuous data stream (812 kbps) would be stored on a solid state recorder (384 Gb) and downlinked via a 0.5m Ka-band antenna to the planned 12m phased array DSN antennas at 7 Mbps.

5.3.1 BLOCK DIAGRAM

NOTE: This diagram is not available for public release.

Figure 7. Spacecraft System Block Diagram

5.3.2 SUMMARY SHEETS

The system sheets are shown on the following pages. These sheets include study guidelines and assumptions, the system worksheets and the equipment lists. Note that contingency is book kept in two separate ways on the system sheet. Subsystem contingency is added at the component level. This can be seen in the subsystem column of the systems worksheet, expressed as percentages. The total subsystem mass (including contingency) can be seen in the column Labeled "CBE + cont". On the system worksheet, the total system level contingency appears on the line labeled "bus total". This is the amount of mass required to reach a total mass Contingency of 30%. The total spacecraft dry mass is shown on the line below that. The Margins on the bottom of the sheet are against the CBE + contingency + propellant mass. The Launch vehicle margin % is against the launch vehicle mass allocation. The spacecraft Margin % is against the current CBE + contingency. Note that there is no contingency taken against the launch vehicle.

TABLE 12. SAFIR SPACECRAFT STUDY GUIDELINES

NOTE: This table is not available for public release.

TABLE 13. SAFIR SPACECRAFT SYSTEMS WORKSHEET

NOTE: This table is not available for public release.

TABLE 14. SAFIR SPACECRAFT EQUIPMENT LIST

NOTE: This table is not available for public release.

5.4 TRADES

5.4.1 TELESCOPE INTEGRAL ATTITUDE AND CONTROL VS. SPACECRAFT PROVIDED ATTITUDE AND CONTROL

Team X explored two different options with regards to providing the telescope the pointing knowledge, control, and stability it requires. The team decided that the telescope was better suited to providing fine guidance and control. This was due to the problems perceived with maintaining fine guidance across a large spacecraft while not generating heat on the cold side of the sun shield. In order to meet the requirements the telescope would have needed a star tracker and possibly an IMU mounted on or near the junction of the telescope and the boom. This would have magnified the already challenging thermal control problems and as a result Team X chose the approach that integrated the fine guidance sensing and control into the telescope.

5.4.2 EXPLORATION OF THE IMPACT OF HIGHER DATA RATE AND SPACECRAFT DRIFT

At the request of the customer Team X explored two design trades involving increasing the assumed data rate (and data volume) from the instruments and allowing the spacecraft to drift into an earth trailing orbit. These trades were never considered for the baseline mission and were performed only to provide the customer with an idea of the impact of the design change. Increasing the instrument data rate and the allowing the spacecraft to drift impacts have same the basic impact on the spacecraft telecommunication and C&DH subsystems. Since both of these subsystems can easily accommodate growth this will have minimal impact to the spacecraft system overall. The impact will be similar for both trades as they both relate to returning data to Earth (either more data or over a longer distance). The telecommunication system can easily grow the size of the HGA (currently 0.5m) or the output RF power or the number of DSN array elements can be increased. The C&DH subsystem can grow the size of the solid state recorder and the data rate from the instrument will not stress the subsystem unless it increases by orders of magnitude.

5.5 TECHNOLOGY

The main technology challenges of this mission related directly to the thermal requirements. The development and qualification of long-life, low temperature cryocoolers is a major technological challenge for the SAFIR mission. Achieving the thermal requirements of the system (4K and below) has not been attempted with cryocooler technology by any NASA program. In addition the proven life time of the majority of cryocoolers is less than 5 years. A design trade that examines the applicability of cryostats to the SAFIR mission would be a worthwhile exercise for the future.

Transporting the heat from all elements on the cool side of the solar shield to the cryocoolers on the warm side will also present a major technological challenge. The large area and multiple low temperature requirements will require significant development. Other areas which will require development will be aided by current efforts for the James Webb Space Telescope, which will address issues such as deployable, large aperture optics.

5.6 RISK

The requirements for new technology directly lead to development risks. Aside from technology development for thermal control, this mission is relatively low risk. In fact, the spacecraft could easily be built with current technology at minimal risk.

The operational risks are focused heavily on the thermal requirements because sudden changes in temperature could damage many critical pieces of the telescope and instruments. This can be somewhat mitigated by fault protection that would keep the solar shade pointed toward the sun at all times (but it would remain an issue).

The reliability of the cryocoolers and reaction wheels is also an operational risk, even with the redundancy of those systems.

5.7 PLANETARY PROTECTION

There are no planetary protection requirements for this mission.

5.8 COST

TABLE 15. SYSTEMS COST BREAKDOWN

NOTE: This table is not available for public release.

6 STRUCTURES

6.1 DESIGN REQUIREMENTS

- The objective of the current study is to review and validate the feasibility of the SAFIR spacecraft design provided by the customer.
    - Team X is to focus on the design of spacecraft elements which operate at greater than 4K.
    - Team I will perform additional work on the telescope design—everything on the cold side of the V-groove radiator (< 4K).
- Mission Life: 5 years nominal with 10 year goal.

6.1.1 CARRIER

- There are no additional requirements that affect the design of the Carrier.

6.1.2 TELESCOPE

- The primary mirror diameter is 10m.
- The primary mirror area is 78.5m^2.
- The gimbaled telescope must provide adequate thermal performance and vibration isolation.
- The telescope has a mass allocation of 3120 kg, including 30% contingency (2400 kg without).
    - This mass allocation is based on rule of thumb that the structural support mass of a stackable, deployable mirror is 2 times the mass of the mirror itself.
    - The mirror surface mass/area ratio used is 20 kg/m^2.

6.2 DESIGN ASSUMPTIONS

- Previous studies: The customer provided the following mass equipment lists for use during the study.
    - Goddard Space Flight Center IMDC (Integrated Mission Design Center) MEL
    - James Webb Space Telescope (JWST) MEL
    - LAI SAFIR Systems Sheets
- The V-groove radiator structural characteristics and deployment were taken as givens from the customer team but details were unavailable. As a result, Team X did no specific design work on the Radiator.

6.2.1 CARRIER

- There are no additional assumptions that affect the design of the Carrier.

6.2.2 TELESCOPE

- Heritage: The telescope mirror is assumed to use the stackable mirror deployment technology designed for JWST.

6.3 DESIGN

The payload is a 10m aperture cryogenic telescope with multi-layer V-groove radiators (12m x 38m), similar in optical layout to FAIR-DART. However, there was no quantitative information made available on the specific design. In fact, the customer team stated that there was no detailed telescope design they could provide. Instead, the directive was to just use the JWST as a stand-in. A graphic of the JWST is shown in the IMDC reports, even though it appears that these IMDC studies pre-date JWST. In any case, there is no real numerical engineering or configuration information available on JWST in the files made available during the study.

The telescope is mounted on a 3-jointed 2x8m boom (the customer originally estimated 5-6m) standing up from the center of the shields (on the cold side of the radiators). The deployed telescope articulates with a 2-axis cryogenic actuator because it needs to point off-angle from the normal to the thermal shields. Since the cryogenic actuator is located on the cold side of the radiators, there is a bookkeeping question as to whether it should really be included with the spacecraft bus.

The study started with the assumption that the customer team had a well-developed design for the telescope and the V-groove radiator. As the study progressed, a lack of actual quantitative information about these inputs became evident. The uncertainties about the design of the telescope payload and the V-groove radiator, which are critical to this study, introduce a higher-than-usual degree of uncertainty into the structure mass estimates.

The customer had what appeared in the beginning to be a well-developed design. The plan was to input this original MEL data to the structural design sheets. During the course of the study, however, two

other MELs with widely different data became available. A summary of the structural mass estimates is given below.

In the GSFC IMDC study (2002), the total structural mass was 739kg, including a 165 kg interstage adapter to the 4394-5 PAF (leaving only 574 kg of actual spacecraft structural mass). According to the Payload Planners Guide, however, this adapter only has a bolted interface without a separation system. As such, the decision to use this approach may be based on an invalid assumption.

The second source of structural mass information came from the JWST design. Consider the Powerpoint presentation titled "JWST_SC Info for Team X,"(external to JPL, provided by the Northrop Grumman team). On page 9 of this presentation, the Structural and Mechanical Subsystem (SMS) is listed as having a 524 kg total mass; the spacecraft total dry mass is 2000 kg and the propellant mass is 361 kg. No further details or breakdown for the Structural and Mechanical subsystem was supplied. Although the JWST design is considered more well developed, the IMDC study at least provided a structure mass breakdown.

An Excel file titled "LAI-SAFIR_System_Sheets" was also provided during the study (external to JPL, provided by the Northrop Grumman team). However, this "GTWS-C Mission" design also has no breakdown; the only summary shown is a single bus structure mass of 768 kg out of 1401 kg total bus mass. In addition, a short disclaimer states that these results are actually part of the 2000-2002 IMDC study.

This ambiguity of the previous designs makes the design/evaluation of the spacecraft bus and the interfaces to the telescope payload very uncertain. Although several different customer MELS were provided, a Team X parametric mass estimation was ultimately used for the bus structure. In general, the telescope mounting on the cold side of the V-groove radiator during launch, in addition to the instrument and boom interfaces, will present some interesting design challenges.

6.3.1 CARRIER

The V-Groove Radiator consists of 5 deployable layers mounted on the spacecraft bus. In addition, there is a single sun shield, mounted on the cold side of the V-Groove Radiator. The largest uncertainty with the present design is related to how the structural loads are fed-through the V-Groove Radiator, which is critical to the thermal performance. It can only be assumed that the required load bearing feed-through structures, however they are designed, are included in the stated V-Groove Radiator mass. However, that assumption appears to be uncertain, even though it's derived from JWST (which is currently in Phase B).

The Carrier spacecraft consists of the following elements:

- 2-axis articulated 0.5m HGA
- Solar arrays are deployed out into a fixed position.
- Propulsion has 4 tanks, 80cm diameter each

There appeared to be a wide discrepancy in cabling mass estimates among the previous designs supplied by the customer. For example, in the MEL for "JWST_SC INfo for Team X," the cable harness mass is listed as193 kg (9.7 % of 2000kg total dry). However, in the IMDC study "LAI-SAFIR_System_Sheets," the cable harness mass is 10.2 kg (0.7% of 1401 kg dry). It is not clear what the assumptions are that lead to these vastly different cable mass estimates. The final decision was to use the Team X cabling algorithms, which produced 98 kg.

6.3.1.1 Equipment List

The total structural mass for the main spacecraft is 876.1 kg CBE. The structural elements with the most mass are the primary structure (487.7 kg) and telescope 3-joint boom (197.9 kg).

TABLE 16. SAFIR STRUCTURE AND EQUIPMENT MASS ESTIMATES

				Mass (kg)		
Materials:	Composites		Units	Current Best Est.	Contin-gency	CBE + Conting.
TOTAL (less Cabling, LV adapters)				**876.1**	**30%**	**1138.9**
Primary Structure			1	487.7	30%	634.0
Secondary Structure			1	62.3	30%	81.0
Telescope 3-Joint Boom			1	197.9	30%	257.2
Solar Array Structure			2	27.4	30%	35.6
Solar Array Actuator(s)		(Fixed)	0	0.0	30%	0.0
Solar Array Latch/Release+Booms			2	5.2	30%	6.8
Antenna Articulation Mechanism		(2-axis)	1	6.7	30%	8.7
Integration Hardware & MHSE			1	34.1	30%	44.4
Balance Mass		3-axis	1	54.9	30%	71.3
Adapter, SC side		(not in mass total)	1	93.5	30%	121.5
Cabling Harness				**99.6**	**30%**	**129.4**

6.3.2 TELESCOPE

Although the customer team initially desired a review of the telescope, a lack of available information resulted in a directive to treat the telescope as a black box. The final mass allocation was 2400 kg + 30 % contingency for the entire telescope with its integral back structure and deployment mechanisms. This allocation was based on feedback from Northrop Grumman engineers experienced in deployable mirror design, particularly for JWST. JWST uses a rotation-translation joint to deploy and latch 7 hexagonal mirror segments, which are originally stacked together. SAFIR proposes to use the same deployment scheme. For SAFIR, the smaller, secondary mirror deploys on three retractable struts before the main aperture deploys. This secondary mirror deployment method was not selected for JWST because of its complexity.

The telescope mass allocation depends primarily on the mirror surface mass/area ratio, which is 20 kg/m^2 on JWST. According to Northrop Grumman engineers on the customer team, the rule of thumb is to double the mirror mass to account for support structure & actuators. Since the 10m SAFIR mirror has a total surface area of 78.5 m^2, the total mass allocation becomes approximately 3140 kg (2 x 78.5 m^2 x 20 kg/m^2).

Aside from the telescope instrumentation, Structures was asked to estimate the mass of the 3-joint deployment/stand-off boom between the radiator and the telescope. Although Moog Type 5 actuators were assumed for ACS, Structures was concerned that these actuators might not be nearly stiff enough for the mass of the telescope. Therefore, Structures assumed Type 7 (the biggest in the catalog) at 7.7kg each and added 50%. In addition, the boom tube requires high stiffness; the assumed boom specifications were 20cm (8") diameter (at an L/D of 40) and 6mm (0.25") wall thickness, with a linear density of 8.5kg/m composite. Thus, the 2x8m deployment/stand-off boom mass sums at 136kg, allowing 20% for end fittings, etc. The total mass of tubing and actuators comes to 197 kg CBE.

6.3.2.1 Equipment List

The telescope was treated as a black box during this study. Thus, an equipment list is not provided.

6.3.3 SEPARATION EVENTS

The major separation/release event is the unlatching of the telescope and its 3-jointed boom from the launch latch position.

TABLE 17. STRUCTURAL/MECHANICAL SEPARATION EVENTS

Separation Event	Mechanism
Solar Panel Deployment	Pyro or wax-pellet actuators

V-groove Radiator Arm Deployment	Stored-energy (spring loaded) or electric motor
Telescope Boom Deployment & Latch	Electric motor feedback-controlled
High gain antenna deployment	Electric motor feedback-controlled
Telescope articulation	Electric motor feedback-controlled
V-groove Radiator Shield Deployment	Electric motor

6.3.4 CONFIGURATION

The customer team had some good illustrative configuration graphics, but Team X did not perform additional configuration work. As no CAD files were available from customer, it would have been a major work effort to create a new CAD model from-scratch. Since both time and study funds were limited, the consensus was that configuration graphics were not worth generating. However, for completeness, graphics from customer-provided file are shown below.

6.3.4.1 Carrier

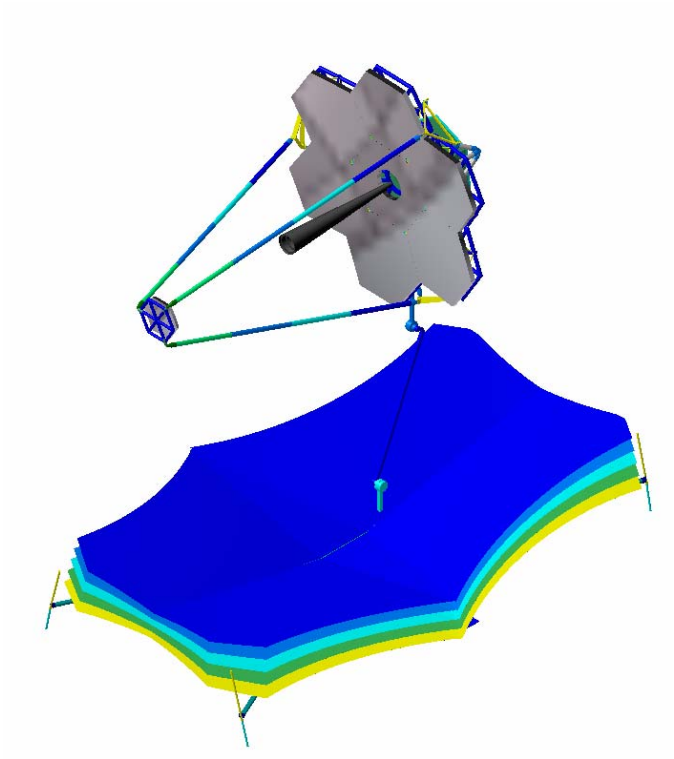

FIGURE 8. SAFIR SPACECRAFT ISOMETRIC VIEW

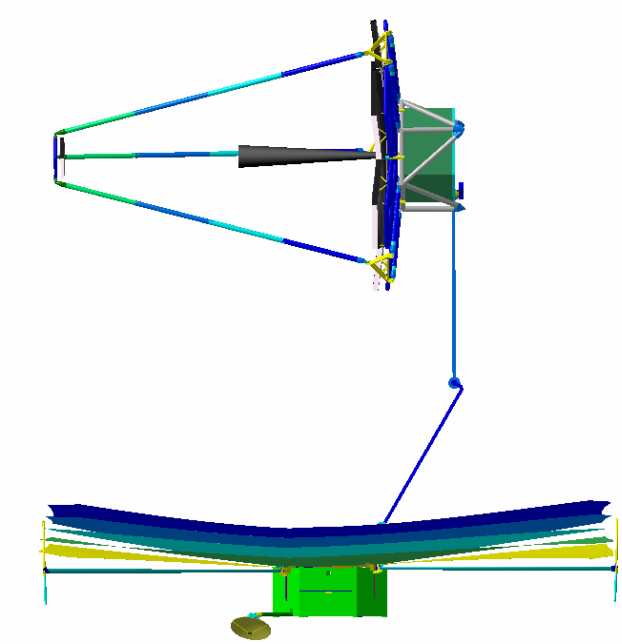

FIGURE 9. SAFIR SPACECRAFT SIDE VIEW

6.3.4.2 Telescope

Additional customer-produced configuration graphics for the telescope were not available.

6.3.4.3 Configuration Modes

As no 3D models (configuration graphics) were generated for this study, configuration modes are not available. In general, the configuration modes are:

- Stowed in launch vehicle fairing
- Deployed On-orbit

6.4 TRADES

There were no structural trades conducted during this study.

6.5 TECHNOLOGY

Structures and Mechanisms assumes use of best current technology, no specific technology development needed or presumed for this mission.

TABLE 18. STRUCTURES TECHNOLOGY OVERVIEW

Subsystem	Technology Type	Metrics (Performance measurement)	TRL	Criticality (Mission Critical, Enabling, Enhancing)	Comments
Structures	Primary mirror deployment & latch	Mirror surface accuracy	2	Critical	
	Telescope positioning & pointing boom	Pointing accuracy, stability, robustness	4	Critical	

6.6 PLANETARY PROTECTION

Not applicable.

6.7 RISK

Structures technology risk is basically low per usual Structures design philosophy; assumed to employ current best technology, standard design procedures and testing, and appropriate stress margins.

6.8 COST

The cost breakdown for structural components is shown below in FY05 dollars. This cost analysis assumed the following:

- Class A mission
- Proto-flight hardware
- No engineering model

One caveat must be stated about the total cost shown. A total structural mass greater than 600 kg is well beyond Team X's validated range for structures costing. As such, the study's cost estimates have a higher-than-usual range of uncertainty and the totals may well be rather under-estimated. In addition, the cost of the 2x8m telescope positioning arm may be optimistic, again, because of its scale.

TABLE 19. STRUCTURES SUBSYSTEM COST BREAKDOWN

NOTE: This table is not cleared for public release.

TABLE 20. SAFIR STRUCTURES COST BREAKDOWN

NOTE: This table is not cleared for public release.

7 THERMAL

7.1 DESIGN REQUIREMENTS

- SAFIR (single aperture far infrared observatory) is meant to build on the technologies of JWST, SIRTF, and Herschel to look at thermal emission from dust (20 μm to 200 μm). This will provide insight into star formation and the origins of galaxies.
- 5 year life time (consumable for 10 years) at an L2 orbit. An L2 orbit will eliminate or reduce any eclipses or earth-orbiting effects and minimize heat variations.

7.1.1 CARRIER

- Cooling requirements are as follows
  - 10 μW at < 0.1 K
  - 100 mW at 4 K
  - 100 mW at 15 K
  - 1 W at 40 K
- An ADR (Adiabatic Demagnetization Refrigeration) Cryocooler used to provide cooling at the detector level (performance and weight are provided as customer input but "booked" within the thermal subsystem).

7.1.2 TELESCOPE

- 10m mirror will be cooled to 4 K, with the detector focal plane at < 0.1 K.

7.2 DESIGN ASSUMPTIONS

- A launch timeframe of 2020

7.2.1 CARRIER

- Baseline design is based off of JWST (James Webb Space Telescope), although SAFIR is much larger (10 m vs. 6.5 m mirror) and colder (< 0.1 K detectors for SAFIR).
- The 3 stage cryocooler has the following cooling power capabilities (at an input power of 200 W)
  - 30 mW at 4 K
  - 100 mW at 15 K
  - 500 mW at 40 K
- Use a multi-stage V-groove radiator, where the upper stage of the V-groove radiator system will be actively cooled to 15 K by 5 passive stages and a sixth stage which is actively controlled by a cryocooler to 15 K.
- Sunshade will be fixed (in relationship to the sun) and pointing will be accomplished by moving the telescope (minimizes the required sunshade size)

7.2.2 TELESCOPE

- All instruments operating cooler than 0.1 K are considered a "black box" with input data obtained from the customer.

7.3 DESIGN

7.3.1 CARRIER

- Spacecraft radiator (7.4 m^2) to dissipate remaining ~1400 W from the spacecraft at 300 K. This is the balance of heat (heaters, box dissipation, battery power, etc.) that will need to be rejected from the hot side.
- A combination of MLI, heaters, thermostats, thermal sensors, thermal control surfaces, and heat pipes will be used for thermal control
- Total thermal system mass is 817 kg (1063 kg with contingency) which is made up mostly from cryocoolers, the sun shield, and thermal radiators.
  - V-groove and Sunshield: 425 kg (552.5 kg with contingency)
  - Cryocoolers (> 4K control): 201.7 kg (262.1 kg with contingency)
  - Cryocoolers (< 4K control): 40 kg (52 kg with contingency)
  - MLI, Heaters, Heat Pipes, etc: 150.3 kg (195.4 kg with contingency)
- The power requirements for the thermal system are 1304 W during operation, the bulk of which comes from cryocooler operation.

7.3.1.1 *V-groove Radiator **&Sunshield***

- The V-groove radiator size and configuration is based on the JWST design with a 10% increase in mass (for a total mass of 425 kg).
    - This accommodates a fixed sun shield and an articulating telescope
- The V-groove radiator is made up of 5 passive layers (with each successive layer cooler than the one previous), going from a hot side of 300 K to a cold side of 15 K.
- A sixth layer is the sun shield, which will be actively cooled to 15 K with cryocoolers and heat pipes.
- Sun shield is stationary with respect to the sun, where pointing is accomplished by moving only the telescope.

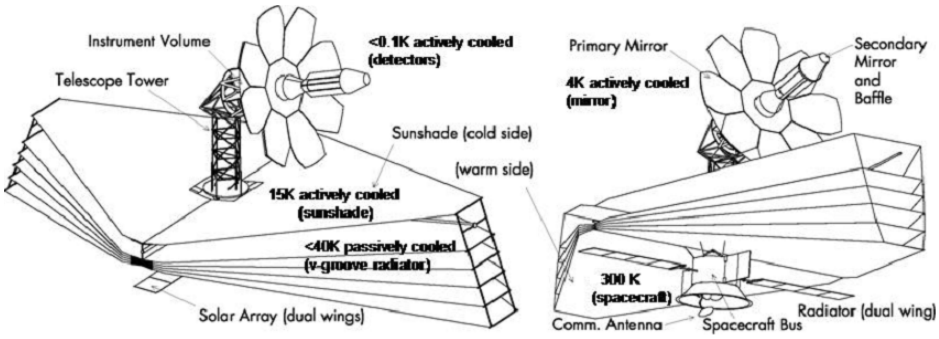

FIGURE 10. THE SAFIR CONFIGURATION AND VARIOUS TEMPERATURE RANGES

7.3.2 TELESCOPE

7.3.2.1 *Cryo-coolers (to 4 K control)*

- Each V-groove layer does not have its own dedicated cryocooler. In other words, the total heat load on the V-groove requires multiple cryocoolers to work together.
- 4 active cryo-coolers (plus 1 spare)
    - Given an input of 200W, the 4 cryo-coolers provide a total cooling load of:
        - 120 mW at 4 K
        - 400 mW at 15 K
        - 2000 mW at 40 K
    - All 5 cryocoolers have a total mass of 150 kg and dissipates 800 W while active
- 1 dedicated cryo-cooler radiator (4.4 m^2)
    - A dedicated cryocooler radiator will dissipate 800 W at 300 K on the hot side of the spacecraft (assumes a poor view factor = 0.5)

7.3.2.2 *Cold Stage Control (colder than 4 K)*

- A cold stage heat transfer mechanism (cold stage spreader) (10 kg) will be needed to distribute heat along the 10m mirror
- Two ADR cryocoolers are used to provide 10 μW cooling at 0.1 K, where only the cold side is on the instrument itself
    - Total mass = 30 kg and total power dissipation = 100 W

7.3.2.3 *Block Diagram*

FIGURE 11. CARRIER SPACECRAFT THERMAL CONTROL SYSTEM BLOCK DIAGRAM

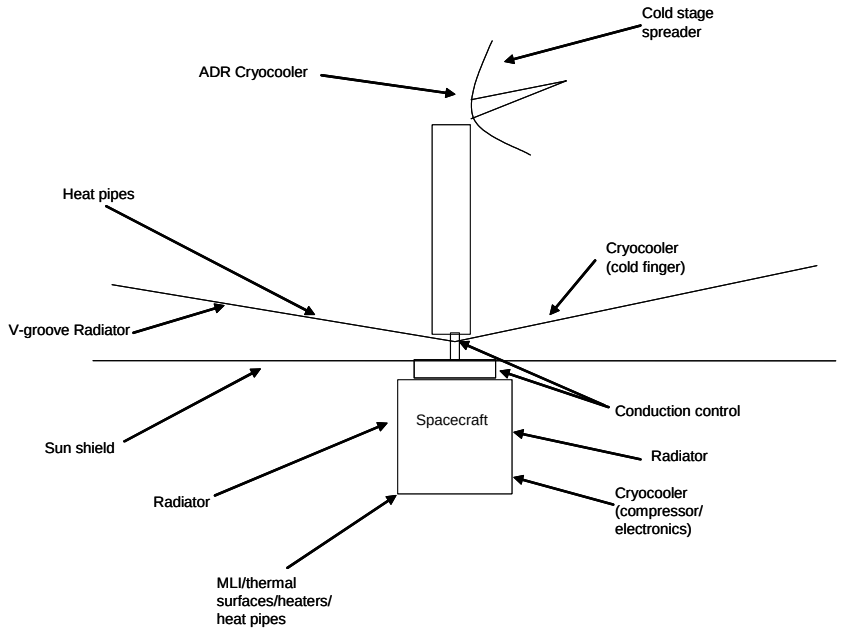

7.3.3 THERMAL ENVIRONMENT

- Cryocoolers will remain on during science operation phases. They will be turned off during the launch phase. They may be turned off as part of a safe mode, although the mission impact (specifically the amount of time that will then be required to re-cool the optics) may be significant.
- It is assumed that all solar energy, earth shine, and moon shine will not affect the sun shade performance. A detailed ray tracing analysis of the possible light diffraction of the moon or earth around the sun shade onto the instrument will be required (stray light analysis).
- The spacecraft temperature ranges from 0.1 to 300 K. The max heat rate is 1350 W/m^2.

7.3.4 THERMAL COATINGS AND PROPERTIES

- Multi-layered insulation (MLI) blankets will be used to isolate the hot electronics and spacecraft from the cold instrument (i.e. 20 layers with an effective emittance of 0.05)
- Thermal control surfaces and radiator properties will be chosen to maximize their heat rejection capabilities (and reduce the amount of energy absorbed if in the direct path of solar energy). Since the spacecraft bus side will constantly be exposed to solar illumination, long-life materials will be chosen to minimize any UV degradation.
- Sun shade materials will be chosen to maximize their ability to reject heat directly to space, without absorbing any energy (highly specular and low emittance properties to "direct" the energy to the gaps exposed to space). Kapton film will be used for this purpose.

7.4 TRADES

7.4.1 MOVING HEATSHIELD VS. STATIONARY SHIELD

The sunshield can either be fixed or articulated with repect to the articulated telescope. A fixed sunshield reduces the overall size required but mechanisms that operate in a cold (4-15 K) environment are needed to maneuver the telescope. In contrast, moving the entire sunshield/telescope assembly will require an overall increase in size and mass of the sunshield.

7.5 TECHNOLOGY

7.5.1 SUNSHIELD

- While the sunshield is based off of the JWST design, SAFIR will require an actively controlled shield at 15 K. This requires the integration of the cryocoolers cooling the last layer of the sunshield, and the heat pipes minimizing thermal variations, all mounted on a deployable sunshield membrane.

7.5.2 CRYOCOOLERS

- Additional development of cryocooler technology (in efficiency, weight, and power usage) will help enable the thermal control of the sunshield at 15 K, the telescope at 4 K, and the detectors at 0.1 K

TABLE 21. THERMAL TECHNOLOGY OVERVIEW

Subsystem	Technology Type	Metrics (Performance measurement)	TRL	Criticality (Mission Critical, Enabling, Enhancing)	Comments
Thermal	Sunshield	Size, mass, temperature	2	Enabling	
	Cryocoolers	Efficiency, weight, power usage	3	Enabling	

7.6 RISK

Risk items for the thermal control subsystem are moderate; the following issues should be considered. The mitigation for all of these risks would be design and testing.

- Sun shield performance – includes design and lay-out, isolation of one layer to another, view factor calculations, efficiencies of material properties (namely emittance and conductivity). A deployable sun shield that requires active cooling may be a configurational challenge, as well as difficult to test on the ground.
- 4 K coolers – mass, power, and capabilities are specified but additional heat loads or less efficient coolers will modify the stated capabilities. Vibration effects on the telescope from the cryocoolers may affect performance of measurements. Thermal back loads from the instrument onto the shield will affect the overall detector temperatures. Variation in temperature across mirror or shield may affect readings. Mechanisms and actuators will need to operate at very cold temperatures.
- Warm side of spacecraft (300 K without a good view to space) – the spacecraft will be much warmer without a good view to cold space, making the standard heat rejection processes (i.e. the waste heat from the cryocoolers and the spacecraft itself) much more difficult. In other words, small uncertainties at high temperatures will cause large heat leaks (proportion to T^4) so the hot side control is a risk area.

7.7 COST

The total thermal system cost is $72 million ($61.2 is recurring and $10.8 is non-recurring).

TABLE 22. THERMAL SUBSYSTEM COST BREAKDOWN

NOTE: This table is not available for public release.

8 POWER

8.1 DESIGN REQUIREMENTS

- Class A
- Fully redundant
- 2013 technology
- 2020 launch, 5-10 year lifetime, L2 position
- 3-axis stabilization
- Max solar range is 1.01 AU

8.1.1 CARRIER

- Power system type: Solar arrays with secondary batteries

8.1.2 TELESCOPE

- Solar arrays do not have rear view factor to space, i.e. they can dissipate heat only from the sun-side .

8.2 DESIGN ASSUMPTIONS

8.2.1 CARRIER

- Solar Array with Secondary Battery and Shunt control
- Solar array sizing determined by "all instruments" mode and batteries by 3 hour "safe mode"
- Deployable fixed orientation solar array wings
- Li-Ion Battery
- Three batteries to support level handled by two, dual electronics with cross-strapping
- Technology is SOTA (state of the art)

8.2.2 TELESCOPE

- There are no assumptions which affect the power design of the telescope.

8.3 DESIGN

The following design details are covered in the following sections:

- Overall power system
- Power source/generation
- Power storage/distribution
- BOL/EOL power
- Power modes and durations (for critical events)

8.3.1 POWER MODES

- Critical Mode for Solar array sizing is "All Instruments."
- Critical Mode for Battery Sizing is Safe Mode with assumption of 3 hour duration.

TABLE 23. POWER SYSTEM OPERATING MODES

NOTE: This table is not available for public release.

8.3.2 POWER SOURCE

8.3.2.1 Solar Array

The array consists of two (2) wings with advanced multi-junction solar cells (3-4-5 junction) with 32% efficiency, mounted on deployable rigid panel substrates. The wings are canted 20 degrees from the sun normal. The array sits above the thermal shield, consequently losing rear surface view factor to space and therefore running at an elevated temperature of ~90C. Solar array redundancy can be achieved through two means, redundant circuit wiring, or additional circuit strings.

TABLE 24. CARRIER SPACECRAFT SOLAR ARRAY DESIGN

NOTE: This table is not available for public release.

Solar Array Degradation and Loss Factors

The 0.98 fatigue loss is high in view of the limited number of thermal cycles. Consequently, it is included to "book keep" additional wiring or additional circuitry as selected for redundancy. The 0.92 radiation degradation factor assumes a 10 year mission life.

TABLE 25. CARRIER SPACECRAFT SOLAR ARRAY DEGRADATION AND LOSS FACTORS

Degradation and Build-Up Loses		
Distance from sun	1.01	AU
Mismatch & fabrication	0.98	
Wiring & diode loss	0.96	
Cell temperature	90	·C
Shadowing losses	1.00	
Sun offset angle	20	deg
Ultraviolet degradation	0.98	
Radiation degradation	0.92	
Fatigue (thermal cycling)	0.98	
Micrometeoroid loss	0.98	

8.3.3 POWER STORAGE

8.3.3.1 Secondary Battery

Three (3) batteries are used to meet the redundancy requirement. The loss of 1 battery allows a 3 hour safe mode to be met with acceptable DOD from the remaining two (2). Having slightly greater electronics control complexity is mass and cost beneficial over use of two (2) larger capacity batteries where Safe mode can be met with loss of one.

TABLE 26. SECONDARY BATTERY DESIGN

NOTE: This table is not available for public release.

8.3.4 POWER ELECTRONICS

Power Electronics Design Summary			
System Type:	Medium Orbiter	Class A	Dual w/ Cross Strapping
SA w/ 2nd Batt and Shunts Only		6U Boards	
Switching:	Dumb Solid Stat	Power Conversion	COTS

TABLE 27. CARRIER POWER DISTRIBUTION ELECTRONICS DESIGN

NOTE: This table is not available for public release.

8.4 TECHNOLOGY

Solar Cell technology is advanced and anticipates developments presently in the R&D phase.

TABLE 28. POWER SYSTEM TECHNOLOGY OVERVIEW

Subsystem	Technology Type	Metrics (Performance measurement)	TRL	Criticality (Mission Critical, Enabling, Enhancing)	Comments
Power	Multi-junction	Efficiency	4	Enhancing	

8.5 RISK

Solar cell technology is advanced and anticipates developments presently in the R&D phase. Use of present SOTA cells would increase the solar array area and mass by ~ 12%.

8.6 COST

NOTE: This section is not cleared for public release.

9 PROPULSION

9.1 DESIGN REQUIREMENTS

9.1.1 CARRIER

- The SAFIR mission requires a single propulsion system.
- Redundancy: The propulsion system is redundant, except where that is impractical (such as the propellant tank)
- Delta V: The propulsion system must provide delta V maneuvers over the whole life of the mission (up to 10 years) of up to 175 meters/second
    - TCM-1 is nominally 35 m/s but with 3 sigma variation could be up to 100 meters / second
    - The L2 insertion has two burns,
        - The first TCM2 has an allocation of up to 15 meters/second
        - The second TCM 3 burn has an allocation of up to 10 meters/second
    - The allocation for orbital correction maneuvers is 5 meters/second per year for 10 years
    - 100+15+10+5x10 = 175 meters/second
- The propulsion system must provide small attitude control maneuvers for unloading the reaction wheels
- The propellant was sized for a spacecraft wet mass at launch of 7750 kg

9.1.2 TELESCOPE

- The telescope has no propulsion design requirements other than the need to provide pointing control. See the ACS section for more details.
    - ACS propellant is used for unloading the reaction wheels.
    - Also propellant may be used for adjusting the spacecraft location over the mission life

9.2 DESIGN ASSUMPTIONS

9.2.1 CARRIER

- Propulsion System Type: hydrazine monopropellant system
- Pressurization System Type: Blowdown system. This is the most cost effective, with good mass efficiency.
- Contamination: Assume that contamination from a hydrazine system on the warm spacecraft side is not an issue on the cold telescope side. This assumption is based on a JWST study that showed no contamination on the far side of the sun shield onto the optical surfaces.
- Torques: Assume that unintended torques resulting from plume impingement on the sun shield surfaces can be compensated.
- Pure Couples: Assume that pure couples are not needed for attitude control (during wheel de-saturations) and that the small delta V imparted is not a problem.
- Thrust: Assume that the thrust direction is always generally away from the sun, or at least tangential to the spacecraft's orbit around the sun, as there is no capability to provide thrust on the cold side of the vehicle to thrust back towards the sun.
    - Providing thrust on the cold side was examined briefly and found to be a very difficult problem. In such a scenario, the propulsion system would have to be cold Helium gas; however, the propulsion feed system mechanisms at the required low operating temperatures are not currently available.
- Previous studies: JWST studies currently have a similar propulsion system and suggest that the assumptions given above are reasonable.
- Propellant for reaction wheel de-saturation was not calculated.
    - According to the ACS chair, the minimal orbit perturbation source is torque produced by the impinging solar wind. Thus, it is reasonable to assume that the CG is along the same axis as the center of pressure from the solar wind.
    - A (conservative) propellant usage of 2 kg/year was assumed for reaction wheel de-saturation over 10 years

9.2.2 TELESCOPE

- Since the telescope does not have a propulsion system, there are no applicable design assumptions.

9.3 DESIGN

- The propulsion system is a blowdown hydrazine mono-propellant system (see Table 29 for details).
- There are four main engines (for redundancy and control) used for TCM burns. They fire directly away from the spacecraft and are 5 Newton monoprop thrusters.
- There are twelve ACS engines (for redundancy and control) used for ACS maneuvers during safe mode, and reaction wheel unloading.
    a. The thrusters do not provide pure couples as they are limited to the warm side of the spacecraft (one side of the center of mass)
- There is 605 kg of hydrazine propellant stored in four (4) independent diaphragm tanks, each with a 3:1 blowdown ratio and helium pressurant (starting at 400 PSI).
- The four propellant tanks are ultralight composite tanks with a thin titanium liner and carbon composite overwrap material. They have a mass of 6.6 kg each (current best estimate).
- The four tanks are connected to a manifold on the liquid side. Independent pressurant service valves on the gas side are used to prevent unequal distribution.
- After the tank manifold, the liquid propellant must then pass through a filter to two parallel latch valves. The latch valves are redundant to prevent against a failed closed condition, and provide a redundant seal against a thruster valve that leaks during the mission.
- The liquid lines are wet to the thrust at the time of launch to prevent a water hammer after launch. However, to prevent leaks during ground handling and launch vibration, the lines downstream of the latch valves are only pressurized to a launch pressure of 50 psi.
- The vehicle is launched with the latch valves closed, and then they are opened in flight before every maneuver.

9.3.1 CARRIER

TABLE 29. CARRIER SPACECRAFT PROPULSION PARAMETERS

NOTE: This table is not available for public release.

9.3.1.1 Schematic

FIGURE 12.CARRIER SPACECRAFT PROPULSION SYSTEM SCHEMATIC

Not provided.

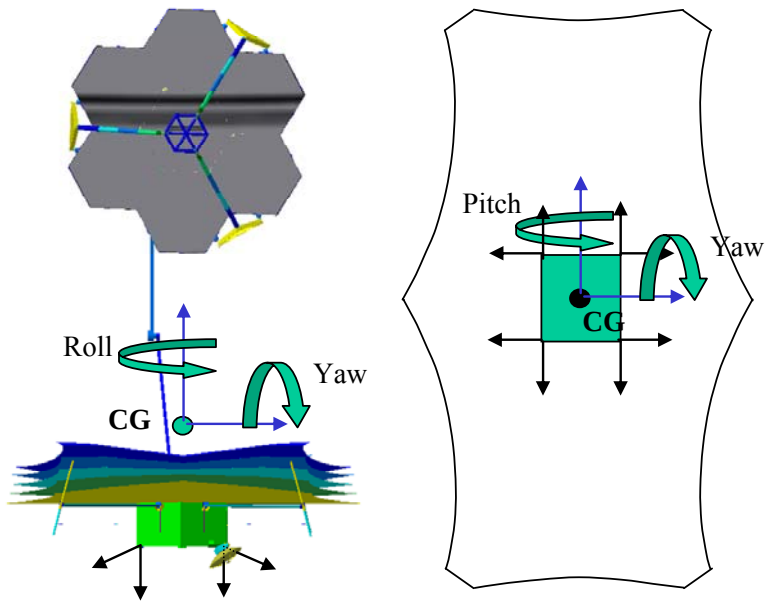

FIGURE 13. SAFIR THRUSTER PLACEMENT AND ATTITUDE CONTROL (1/2)

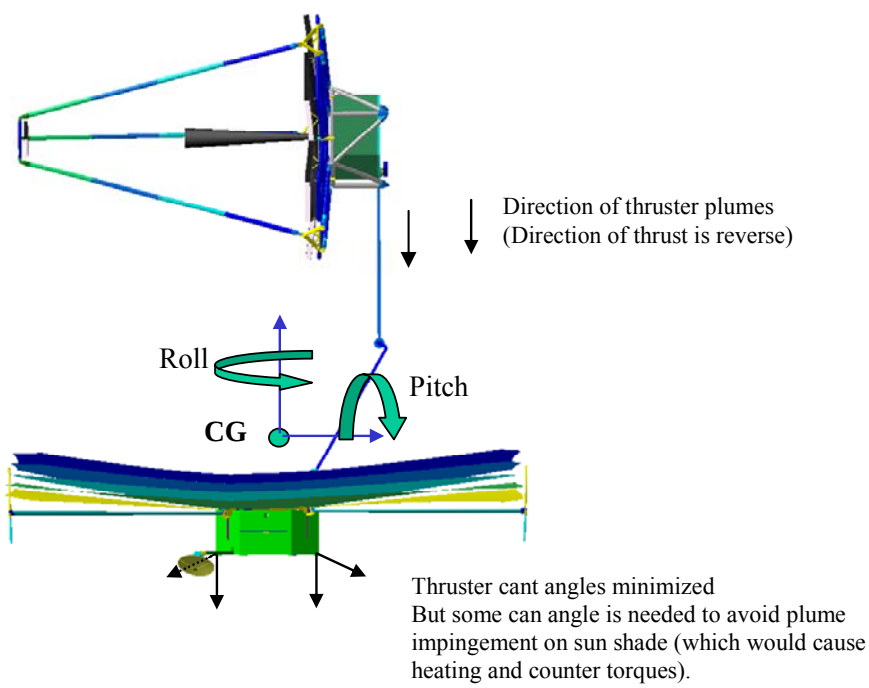

FIGURE 14. SAFIR THRUSTER PLACEMENT AND ATTITUDE CONTROL (2/2)

9.3.2 TELESCOPE

- Not applicable.

9.3.3 OPERATING MODES

TABLE 30. PROPULSION SYSTEM OPERATING MODES

Mission Event	Operating Thrusters	Purpose (trajectory correction, etc.)
Trajectory Correction Maneuver	Four Z facing thrusters	Trajectory Correction
Wheel Desaturation	Four at a time, any of 12	Wheel Desaturation

9.4 TRADES

9.4.1 CARRIER

- No trades were conducted for the propulsion system on the Carrier spacecraft.

9.4.2 TELESCOPE

- Not applicable.

9.5 TECHNOLOGY

- Ultralight composite propellant tanks are currently under development and should be qualified by Spring 2006 (for possible use with MSL). If unavailable then, the dry mass of the propulsion system would go up another 18 kg (CBE) to 23 kg (with margin) due to the added mass of existing technology Titanium propellant tanks.

TABLE 31. PROPULSION SYSTEM TECHNOLOGY OVERVIEW

Subsystem	Technology Type	Metrics (Performance measurement)	TRL	Criticality (Mission Critical, Enabling, Enhancing)	Comments
Propulsion	Ultralight composite propellant tanks	50% Less Mass	4	Enhancing	

9.6 RISK

- The current design only permits thruster-induced couples about the roll axis, whereas pure couples about the pitch and yaw axes (such as those for reaction wheel de-saturation) are not possible. As a result, the use of thrust maneuvers about the pitch and yaw axes will also impart a small delta V to the spacecraft changing the trajectory slightly – which may or may not be an issue (further investigation is needed).
- Plume impingement needs to be closely investigated for this mission. Further design efforts will need to determine whether the contamination, heating, or counter torque effects (from impinging on large surfaces) are significant. If so then redesign will be needed.
- In this study, it was assumed that thrust maneuvers would never be needed in (or close to) the direction of the sun. If such maneuvers are desired, then a significant undertaking will be needed to develop a cold gas helium system that can operate on the cold side of the spacecraft. An alternative mitigation might be to provide large booms on which thrusters are mounted; these booms would permit standard thrust maneuvers but increase the risk of plume impingement problems (the risk being reduced as the length of the boom increases).
- If one of the reaction wheel gimbals fail then the propulsion system can provide some attitude control, but at the cost of increased vibration with each thruster firing which may reduce the science capability. With each Attitude control adjustment on thrusters (assuming wheels not functional) you would have to let the spacecraft vibration damp out. Therefore your science taking time would be limited to the time between the damping of one thruster firing to the firing of the next thruster adjustment. This time may or may not be too limiting to do the required science depending on the observation being taken and the damping rate of the structure.

9.7 COST

- The propulsion system costs include:
  - the design of the system
  - procurement of piece parts
  - working with the tank manufacturer to develop the new tank design
  - engineering and technical expertise to assemble the propulsion system
  - testing and checkout
  - ground support equipment
  - propellant
  - propellant loading
- The propulsion system costs do not include a dynamic test model or a thermal test model. It is assumed that the actual flight system will be tested with environments.
- The propulsion system costs include at least one spare for all components, including thrusters and tanks.
- The propulsion system costs do not include the cost for qualification of any hardware, except the new propellant tanks.
- The propulsion system costs do not include the cost for unknown technical issues. If unforeseen technical issues occur, management reserve funding will be called upon to solve the unforeseen issues.
- Not included in propulsion system costs is cabling and blanketing needed for the propulsion system.
- The cost did not include the secondary structure design, procurement, and/or manufacturing to support the propulsion sub-system (brackets, tube supports, booms, thruster clusters, component mounting plates, service valve brackets, etc).

TABLE 32. CARRIER SPACECRAFT PROPULSION COST BREAKDOWN

NOTE: This table is not available for public release.

10 ACS

10.1 DESIGN REQUIREMENTS

- Mission Class: This is a class A mission according to JPL mission classifications (D-1489).
- Pointing: The spacecraft must be able to provide one arcsec (3σ) pointing knowledge to the telescope with 0.001 arcsec/sec stability.
- Mission Life: The design life of the spacecraft and instrument is five years with a goal (consumables sized for) of ten years.
- Redundancy: The spacecraft is fully redundant (with usual waviers, i.e. main engine, etc).
- Radiation: The mission total radiation dose for the mission life requirement is 25 krad behind 100 mils of aluminum with an RDM of 2.

10.1.1 CARRIER

- Heritage: SAFIR draws a great deal of potential heritage and design similarity to the current design of the James Webb Space Telescope (JWST). Other (lesser) sources of heritage include the Spitzer Space Telescope, Herschel, and Planck.
- Technology: SAFIR requires technology development in the areas of low temperature, long life cryocoolers, thermal transport, low temperature mechanisms and materials, large aperture optics, and a fine guidance sensor on the instruments.

10.1.2 TELESCOPE

- SAFIR requires that the focal plane of the telescope stay at or below 0.1K, the telescope optics must stay at or below 4K, and all other equipment on the cold side of the sun shield must stay below 15K.

10.2 DESIGN ASSUMPTIONS

- Team X budgeted 20 kg as a mass allocation for RCS propellant to unload the reaction wheels.
- Launch Date: The mission would launch in the 2020 timeframe (assumed to be June 2020)
- Inheritance: Team X did not assume any inherited parts or software for this mission.
- Technology: Team X assumed that the technology developments required for this mission would be completed by 2013 (Phase B).

10.2.1 CARRIER SPACECRAFT

- Pointing (knowledge of 1 arcsec, stability of 0.001arcsec/sec) must be implemented using a Fine Guidance Sensor mounted on the instrument (telescope) for this level of accuracy. The ACS system in the spacecraft must then bring the pointing of the fine guidance sensor into the acquisition range of approximately 1-2 arcmin (30-60 arcsec), which can be done by a star tracker. Once the fine guidance sensor has acquired a guide star, the ACS would use this knowledge to control the spacecraft.

10.2.2 TELESCOPE

No separate ACS equipment is carried by ACS for the telescope with the exception of the Fine Guidance Sensor.

10.3 DESIGN

10.3.1 CARRIER SPACECRAFT

- The stabilization method uses reaction wheels. The goal is to have >11 days between momentum unloading to minimize the perturbation to the OD solution.
- Thrusters will be used to unload momentum
- Star tracker and IMU sensors will be used for ACS
- A fine guidance sensor will be used for spacecraft control once the fine guidance sensor has acquired the guide star.
- Gimbals will be used for positioning the telescope.
- Need to control jitter at milliarcsec level which assumes the use of two levels of isolation for RWAs.

TABLE 33. CARRIER SPACECRAFT ACS DESIGN PARAMETERS

Parameter	Unit	Value
Stabilization method	-	Three axis
Carrier Pointing Control	arcsec	60
Carrier Pointing Knowledge	arcsec	30
Telescope Pointing Stability	arcsec	0.001
Telescope Pointing Knowledge	arcsec	1
Redundancy	-	Full
Heritage	-	JWST, etc

10.3.2 TELESCOPE

No separate ACS equipment is carried by ACS for the telescope with the exception of the fine guidance sensor.

10.3.3 OPERATING MODES

- Baseline ACS operating mode during operations
  - Cruise
    - Stabilization method is reaction wheels
    - Thrusters will be used to unload momentum
    - Star tracker and IMU sensors will be used for ACS
    - Gimbals will be used for positioning the telescope.
  - Orbit
    - Stabilization method is reaction wheels
    - Thrusters will be used to unload momentum
    - Star tracker and IMU sensors will be used for ACS
    - Gimbals will be used for positioning the telescope.

10.4 TRADES

10.4.1 CARRIER

No ACS design trades were done for the Carrier spacecraft.

10.4.2 TELESCOPE

10.4.2.1 Fine Guidance Sensor

The level of control knowledge and stability mandates a fine guidance sensor mounted on or near the instrument focal plane, since the errors between the Carrier structure and the instrument will exceed the requirements.

Several possible new types of sensors were discussed by the customer representatives, but further development will be required. A sensor will be developed for use on or near the focal plane.

One possibility discussed was the use of SiAs Bib arrays that operate under the conditions necessary at the focal plane.

10.5 TECHNOLOGY

10.5.1 CARRIER SPACECRAFT

No new development should be required for this spacecraft with the exception of the fine guidance sensor.

10.5.2 TELESCOPE

No separate ACS equipment is carried by ACS for the telescope with the exception of the fine guidance sensor. The development of a fine guidance sensor that will work in the low temperature environment of the telescope focal plane will be a challenging development.

TABLE 34. ACS TECHNOLOGY OVERVIEW

Subsystem	Technology Type	Metrics (Performance measurement)	TRL	Criticality (Mission Critical, Enabling, Enhancing)	Comments
ACS	Fine Guidance Sensor	Increased pointing accuracy and stability	2	Enabling	Need to incorporate a sensor with the telescope to provide required knowledge for spacecraft attitude control

10.6 PLANETARY PROTECTION

None.

10.7 RISK

10.7.1 CARRIER SPACECRAFT

All ACS equipment is redundant with the exception of the actuator bearings, which will require a waiver.

10.7.2 TELESCOPE

No separate ACS equipment is carried by ACS for the telescope with the exception of the fine guidance sensor, which is assumed to be redundant. The FGS has to operate without generating heat which would affect the thermal balance necessary to operate the telescope sensor.

10.8 COST

10.8.1 CARRIER SPACECRAFT

TABLE 35. CARRIER SPACECRAFT COST BREAKDOWN

NOTE: This table is not available for public release.

TABLE 36. CARRIER SPACECRAFT LEVELS OF EFFORT

This table is not available for public release.

10.8.2 TELESCOPE

No separate ACS equipment are carried by ACS for the telescope with the exception of the fine guidance sensor. The cost of the fine guidance sensor is not included in ACS.

11 CDS

11.1 Design Requirements

- Mission duration is 5 years
- Science data rate is 756 TBD kbps
- Science data volume is 280 Gbits in 4 days
- Radiation environment for five years is ~12.5 krads TID (Si). The design requirement will be 25 krads TID (Si) behind 100 mils of aluminum with an RDM (radiation dose margin) of 2 for 5 years
- Technology cutoff is 2013, requiring electronic components to be at TRL 6.

11.2 Design Assumptions

11.2.1 Carrier

- Mass memory will be implemented with a SSR (Solid State Recorder)
- Customer has a C&DH mass estimate of 20 kg (the SSR mass may be missing).

11.2.2 Telescope

Not applicable.

11.3 Design

- CDS design life should be at least 8 years
- 2 redundant SSRs. Each of the two SSRs will be 384 Gbits to meet the science volume requirement of 140 Gbits in two days. With a missed communications pass, the science data volume would be 280 Gbit every four days.
- The advanced Remote Engineering Unit (REU) will have up to 256 analog channels and use about 3 Watts

Table 37. Carrier Spacecraft CDS Design Parameters

NOTE: This table is not available for public release.

11.3.1 Carrier

11.3.1.1 Controller

- JPL Telecommunications Interface (TIF)
  - CompactPCI (Modified) 6U Interface Card
  - 32 Bit, 33 MHz PCI Compliant Bus Interface
  - Redundant MIL-STD-1553B Bus Controller Interfaces
  - Dual Channel Telecom Interface Supporting both SDST and ELECTRA
  - Time Zero Launch Vehicle Umbilical Support
  - Supports Dual String Arbitration
  - Radiation Hard, Maximum 30 KRad (Si) Dose

- JPL CompactPCI (cPCI) Backplane
  - CompactPCI Version 2.2 Compliant
  - 32 Bit, 33 MHz 6U cPCI Compliant Bus Interface
  - 9 Physical Slots (8 cPCI, 1 Power Converter)
  - Ground Support Equipment Interfaces
  - PCI Reset Generation

? = System Controller

PHYSICAL	LOGICAL	PCI GLYPH	
1	--	--	PCU
2	1	?	SFC
3	2	O	NVM
4	3	O	MTIF
5	4	O	MSIA
6	5	O	User-Defined
7	6	O	User-Defined
8	7	O	User-Defined
9	8	O	Test

BackPlane

FIGURE 15. 6U CPCI BACKPLANE

11.3.1.2 Compute Element

- BAE Next Generation RAD750 Space Flight Computer (SFC)
  - Compact PCI 3U Interface Card
  - 32 Bit, 33 MHz PCI Compliant Bus Interface
  - RAD750 PowerPC Processor
  - Enhanced PowerPCI Bridge
  - 66 MHz Memory & CPU Bus Operation
  - SUROM and Local Memory
  - External Interfaces
  - Radiation Hard, Minimum 100 KRad (Si) Dose

- SEAKR Next Generation Non-Volatile Memory (NVM)
  - CompactPCI (Modified) 6U Interface Card
  - 32 Bit, 33 MHz PCI Compliant Bus Interface
  - 256 Mbytes (2 Gbits)
  - Non-Volatile Solid-State Flash Memory
  - Radiation Tolerant (45 Krad TID)

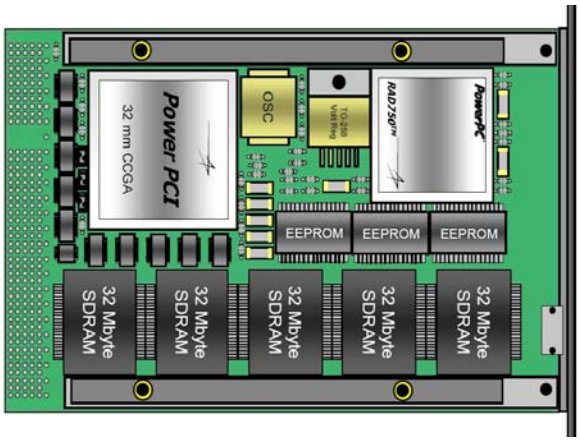

FIGURE 16. NEXT GENERATION RAD750

11.3.1.3 Block Diagram

- JPL System Interface Assembly (SIA)
  - CompactPCI (Modified) 6U Interface Card
  - 32 Bit, 33 MHz PCI Compliant Bus Interface
  - Redundant MIL-STD-1553-B RT Interfaces with DMA Access
  - 4 High speed Synchronous Serial Interfaces with choice of RS-422 or LVDS Drivers
  - Each HSS Interface has DMA access
  - UART 16550D Compliant Interface
  - Supports Dual String Arbitration
  - Radiation Hard, Minimum 30 KRad (Si) Dose

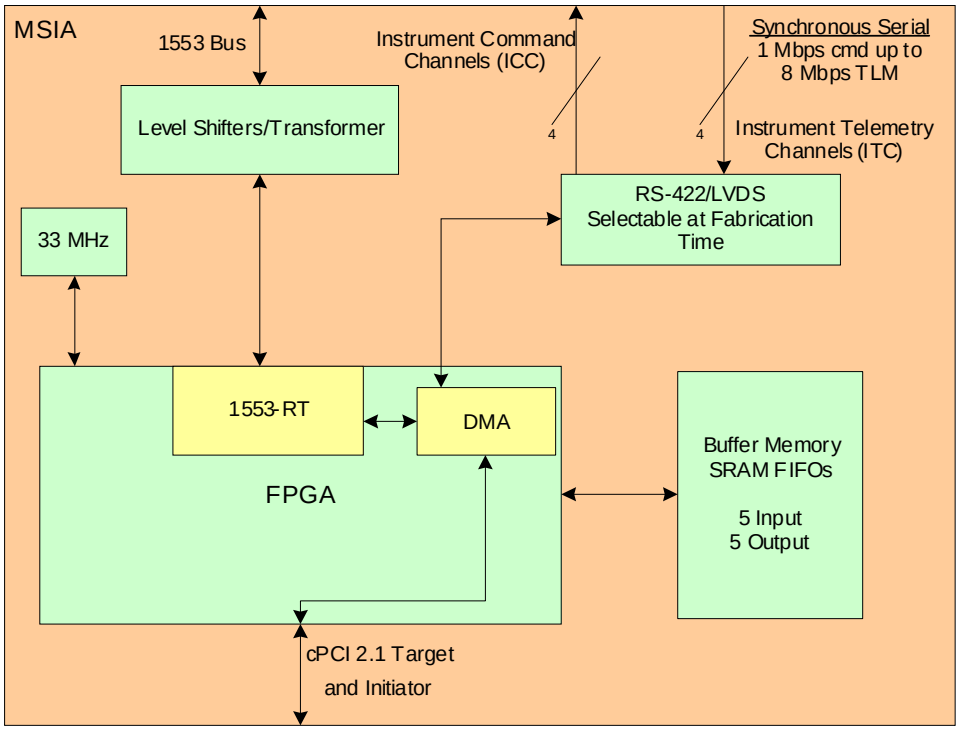

FIGURE 17. SIA BLOCK DIAGRAM

- JPL Remote Engineering Unit (REU)

- 1553 MIL-STD-1553B Remote Terminal Interface
- 256 Analog Channels (for Measuring Temperatures and Voltages)
- Digital Discrete I/O (16 Command and 8 Status)
- Constant Power Region
- Mission Clock
- Alarm Clock
- Radiation Hardened, Minimum 30 kRad (Si) Dose

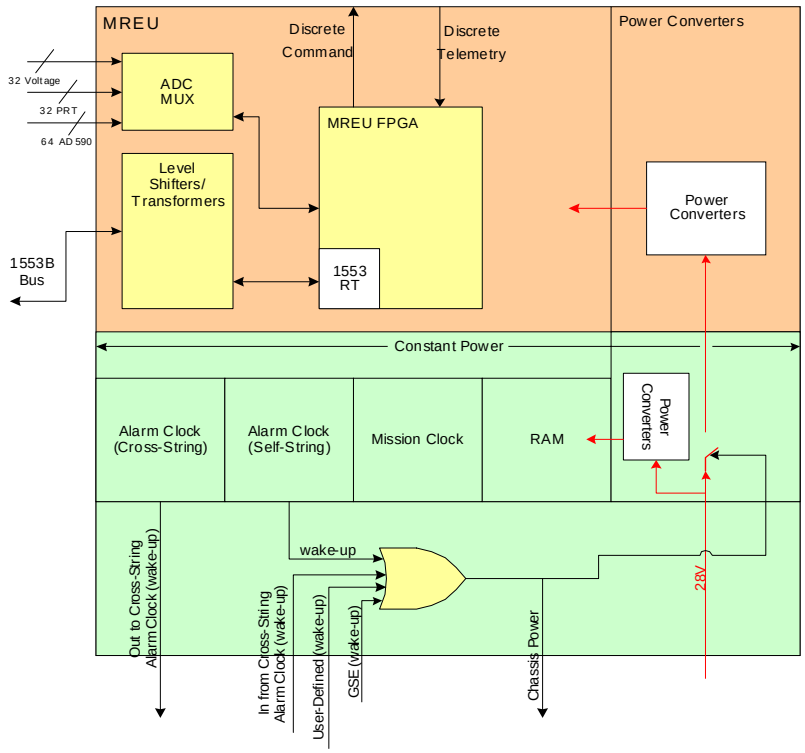

FIGURE 18. REU BLOCK DIAGRAM

- CDS I/O interface capability needs to be tabulated with mission required interface count and at least 30% margins (Quantity of Serial Interface, Discrete I/O, Analog I/O)
- Project should reference the JPL internal document "Design Principles Matrix ID-62432" regarding pre-phase A design margins for memory allocation for boot code, flight image, hardware interfaces, power, mass and etc. See the JPL internal website http://avionics-lib.jpl.nasa.gov/avionics-lib/dscgi/ds.py/ViewProps/File-6339
- Template spreadsheet for "Generic C&DH Interface" can be found at the JPL internal website: http://avionics-lib.jpl.nasa.gov/avionics-lib/dscgi/ds.py/ViewProps/File-7447
- Template table for "Generic C&DH Design Margins" can be found at the JPL internal website: http://avionics-lib.jpl.nasa.gov/avionics-lib/dscgi/ds.py/ViewProps/File-7448 http://avionics-lib.jpl.nasa.gov/avionics-lib/dscgi/ds.py/ViewProps/File-7447

11.4 TRADES

- No CDS trade studies are needed to meet the mission requirements.

11.5 TECHNOLOGY

- No new CDS technology developments are needed to meet the mission requirements.

- Option 2: One terabit collected per day. The implementation per CDS string has two DOD modified 1 terabit recorders. The data collection implementation includes the capability to collect data if there is a missed downlink pass.

TABLE 38. CDS TECHNOLOGY OVERVIEW

Subsystem	Technology Type	Metrics (Performance measurement)	TRL	Criticality (Mission Critical, Enabling, Enhancing)	Comments
CDS	NA	NA	NA	NA	NA

11.6 RISK

- CDS design implementation is low risk.

11.7 COST

NOTE: This section is not available for public release.

12 SOFTWARE

The Single Aperture Far-Infrared Observatory (SAFIR) will combine a large primary mirror with active cooling to provide unprecedented sensitivity at far-IR and sub-millimeter wavelengths. The observatory will study the formation of structures, from the first stars and galaxies in the distant universe to planetary systems around nearby stars.

12.1 DESIGN REQUIREMENTS

12.1.1 MISSION REQUIREMENTS

- Mission Destination/Type: Large Far infrared observation platform at sun-Earth L2 (Lissajous orbit)
- Mission Class: A
- Mission lifetime: 5 years baseline, 10 year goal
- Launch Date: 2015-2020
- Funding Source: NASA Office of Space Science
- Technology:
    - Technology cut-off date of 2013
    - Large, cryogenic deployable mirrors.
    - Long-life cryo-coolers capable of reaching 5 K.
    - Background-limited direct detectors for both continuum and spectral observations.
    - Quantum-noise-limited heterodyne spectrometers tunable over the far-IR spectral region.
- Heritage: JWST
- Radiation: 25krad behind 100 mils of Aluminum with an RDM (radiation dose margin) of 2
- Science Goals:
    - Probe the epoch of reionization due to the first stars when the universe was less than 1/20 its present age
    - Trace the formation and evolution of star forming and active galaxies since their inception.
    - Explore the connection between black holes and their host galaxies.
    - Reveal the details of star and planet formation in nearby debris-disk systems.
    - Search for and quantify prebiotic molecules in the interstellar medium.
- Instruments:
    - Background-limited detector arrays with thousands of pixels for broad-band imaging over the full wavelength range.
    - Moderate resolution (R~1000) spectrometers with background-limited sensitivity and near-unit fractional bandwidth.
    - Heterodyne spectrometers tunable over the full wavelength regime with quantum-noise limited performance.

12.1.2 FLIGHT SOFTWARE REQUIREMENTS

- Heritage: JWST, SIRTF, Herschel
- Redundancy: One redundant flight computer (full-featured RAD 750-based) for the spacecraft.

12.2 DESIGN ASSUMPTIONS

12.2.1 MISSION ASSUMPTIONS

- Number of Partners: Assume a single contractor
- International Cooperation: None
- Work Distribution: The development team is assumed to work in the same facility

12.2.2 FLIGHT SOFTWARE ASSUMPTIONS

- Complexity:
    - Spacecraft attitude control is assumed to be high complexity with full 3 axis control. Both pointing accuracy and rate requirements are tight.
    - Data management has medium complexity
- Fault Protection: the low radiation environment implies little or no requirement for extensive fault protection to mitigate SEE/SEL/SEU events.
- Level of automation

- Technology
- Heritage:
    - UML modeling using Rational Rose tool will be demonstrated on NGST
    - RAD-750 CPU Heritage
- Experience: The entire software is developed by one flight software team. The team is assumed to be highly experienced, with on average > 10 years experience in flight software development activities.
- Simulations
- Software Prototypes
- Critical mission events

12.3 DESIGN

- This report covers two major areas of the software efforts: the spacecraft flight software (or FSW below) and the project software engineering.
- The term "Flight Software," as defined in the JPL internal document, JPL Standard Flight Project WBS (http://rules.jpl.nasa.gov/cgi/doc-gw.pl?DocID=59533), covers not only the flight software design and development efforts, but also the management, system engineering, test bed, fault protection, simulation, modeling, integration and test efforts needed to complete the flight software products. However, it does not cover science investigative and other software delivered with the instruments or payloads (which is covered in Instruments/Payloads report).The flight software WBS items are summarized below.
- The "Project Software Engineering" part includes, for example, development of software policies and practices, software requirements, design, implementation, test issues, flight/ground tradeoffs, and project interface to independent verification and validation (IV&V).

TABLE 39. FLIGHT SOFTWARE WORK BREAKDOWN STRUCTURE

WBS	*WBS Item*
06.12.01	**FSW Management**
06.12.02	**FSW System Engineering**
06.12.03	**C&DH** (Note: OS or device drivers common between subsystems are book-kept here.)
06.12.04	**GN&C** (Note: includes GNC subsystem engineering support for analysis and design of algorithms for attitude determination, guidance, on-board navigation and control, development of computer-based models and simulations for GNC subsystem-level stability and performance analysis. Includes any simulation models for development and test.)
06.12.05	**Engineering Applications** (e.g. Power, Pyro, Thermal, Propulsion, Telecom, etc.)
06.12.06	**P/L Accommodation** (Note: Includes any simulation models for development and test. Excludes: software embedded in the payload.)
06.12.07	**System Services** (Note: include system fault protection, architectural infrastructure frameworks, simulation models for development and test, etc.)
06.12.08	**FSW Dev. Testbed**
06.12.09	**FSW I & T.**

12.3.1 SOFTWARE COST MODEL

The Flight Software Cost model is constructed on top of the COCOMO II model, with a mapping from space mission domain information to the COCOMO model parameters. Since COCOMO is a well-established software cost modeling tool (several hundred projects in industry and government forming the historical basis for the selection of model parameters), the outcome is very credible in general. The model can be further calibrated with historical cost data from select JPL missions, to make it more meaningful to JPL flight missions.

12.3.2 CARRIER SPACECRAFT

- Software architecture:
- The entire software is developed by one flight software team, working in the same facility, to one schedule, and with one set of requirements. There will be a single software architecture that is shared by all. Furthermore, all functions that can be shared across the flight software systems will be shared, and will be developed only once. All the common functionalities and components are included in the fit.
- OOAD using Rational Rose UML software development tools & methodologies
- Software programming language: No information. The development team is likely to generate 245 KLOC. The delivered code is expected to be 261 KLOC.
- Flight computer: The full-featured RAD flight computer supports both ACS and CD&H functions.
- Key Components:
    - C&DH Flight Software
    - ACS Flight Software
    - PSE Flight Software
    - ACE Flight Software
    - Development Systems
    - Testbeds & Simulators
- **ACS/ACE Functions**
    - Manage spacecraft modes (Acquisition, Coarse/Fine Science, Thruster).
    - Data acquisition and processing for attitude sensors (CSS, IRU, star trackers, etc.) and actuators (reaction wheels, thrusters).
    - Generate actuator commands to reaction wheels and thrusters.
    - Generate steering mirror commands
    - Kalman filter to generate attitude and gyro drift correction
    - Validate and propagate spacecraft ephemeris updates.
    - HGA pointing
    - Independent digital Safehold
    - Correct For Velocity Aberration
    - Compute & manage system momentum
    - Estimate State Vector
    - Sun, Moon, and Earth avoidance
    - Detect and Correct ACS Faults
    - Perform orbit adjusts
    - Provide hot back, redundant data set management.

- **CD&H Functions**
    - Flight software architecture base on NGST CC&DH to reduce cost. *
    - A Bootstrap loader to provide basic DRAM and EEPROM memory loads and dumps capabilities.
    - A commercial real-time executive to provide multi-tasking, scheduling, intertask communication, interrupt and exception handling (NGST VxWork).
    - External communication bus operation and arbitration.
    - Capability to cold or warm start the C&DH.
    - Command and data handling shall comply with the CCSDS definitions.*
    - Collection and distribution of on-board state data
    - S/C commands distribution & management
    - Supports autonomous onboard commanding in absolute & relative time-tagged sequences
    - Provide onboard solid state recorder data management.
    - Provide S/C time management and distribution.
    - Provide spacecraft health & safety management, thermal monitoring/control
    - Provide instruments control, health & safety management.
    - Provide capability to load and dump tables/memory.
    - Provide hot backup, redundant data sets management.

- **Three Testbeds**
  - ACS/ACE Flight Software Testbed
  - CD&H/PSE Flight Software Testbed
  - Flight System Testbed
  - 7 PCs (Dynamics, Power, S/C data, Science Raw Data, Uplink Front End Simulators & GSE), Interface Hardware, Software Licenses & Tools, C&DH ACS, ACE, and PSE Breadboards, and Logic Analyzer (simulator and breadboard count vary with different testbeds)

TABLE 40. CARRIER SPACECRAFT FLIGHT SOFTWARE COST MODEL PARAMETERS

Cost, Schedule, and Workforce Summary		***Comments***
Estimated KLOC:	245	Calculated size of the code the development team is likely to generate.
Effective KLOC:	261	Calculated size of the delivered code.
Project Description		
Project Name:	SAFIR	
Project Description and Assumptions	This covers the entire mission's FSW cost	
Options Selected		
Mission Type:	L2 Observation Platform	
Mission Class:	Large/Assigned	
Major Mission Elements		
Carrier:	None	
Lander:	None	
Rover:	None	
Orbiter:	Complex	L2 Insertion, Station Keeping, and Observation Pointing
Impactor:	None	
Telecom Sat:	None	
Fly by:	None	
Rendezvous:	None	
Formation Flying:	None	
Sample Return:	None	
Other Mission Element:	None	
GN&C Cost Drivers		
Spacecraft Attitude Control:	High	High complexity system, with full 3-axis control. Pointing accuracy and rate requirements

		are tight.
Scan Platform:	None	
Antenna Pointing:	Medium	Earth Tracking and Pointing from L2
Antenna Count:	1	HGA
Robotic Arm:	None	
Robotic Arm Count:	0	
Thrust Vector Control:	High	Orbit Insertion and Station Keeping
EDL Type:	None	
Deployable Mechanisms:	Low	
Deployable Mechanism Count:	2	Instrument Structure, Solar Arrays, Thermal Radiators
Other Controlled Mechanisms:	None	
Controlled Mechanism Count:		
C&DH Cost Drivers		
Data Management Complexity:	Mediun	140 Gbit buffer, up to 8MB/s downlink
Radiation Environment:	Low	25 krad behind 100 mils alum., RDM of 2 added. Low radiation environment implies little or no requirement for extensive fault protection to mitigate SEE/SEL/SEU events.
CFDP:	Yes	
Flash Memory:	Yes	Comes with the CDH Hardware
CPU Redundancy:	Dual String – Warm backup	Backup computer
CPU Multiplicity:	Single CPU	RAD-750 Heritage
Load Balancing:	Static	
Engineering Subsystem Cost Drivers		
Thermal Control:	Difficult	Maintain instruments at very low temps during measurements
Power Control:	Moderate	
Telecomm:	Moderate	
Payload Cost Drivers		
# Simple Instruments:	3	Telescope, LRS, HRS, HET
# Medium Complexity Instruments:	1	Cam
# Complex Instruments:	1	IR Spectrometer
On-board Processing:	Simple	

Implementation Cost Factors		
Implementation Mode:	System Contract	
Development Organization Experience:	High	Assume a highly experienced flight software team. That is, the development team has, on average, > 10 years experience in flight software development activities.
Percent Code Inheritance:	25	.JWST
Percent Design Inheritance:	50	
Software Heritage:	Proto Flight	JWST, SIRTF, Herschel
Percent Partner Cost Sharing:	0	
International Partners:	False	
Hardware Heritage:	Nominal to Low	
Number of Partners:	One	Assuming single contractor
Team Geographical Distribution:	Same Facility	The development team is assumed to work in the same facility.
Miscellaneous Cost Drivers		
Safety Requirements:	Property	
Planetary Protection Requirements on S/W:	Category I	No Planetary Contact

12.3.3 Operating Modes

No software operating modes were identified during this study.

12.4 Trades

No software trades were identified during this study.

12.5 Technology

The software assumes the use of JWST design, development technology and tools, and CPU technology. Therefore as long as JWST is completed the software technology developments are low.

Subsystem	Technology Type	Metrics (Performance measurement)	TRL	Criticality (Mission Critical, Enabling, Enhancing)	Comments
Software	CPU	-	-	-	Assumed heritage From JWST

12.6 Planetary Protection

There are no planetary protection requirements for this mission.

12.7 Risk

The software risk is low since it uses existing JWST design and technology. The assumptions used in the risk assessment are provided below.

- No new concept, i.e.
    - UML modeling using Rational Rose tool will be demonstrated on NGST
    - Space-to-ground IP will be demonstrated on GPM
- WV IV&V are handled at project level.
- Early data system component development is required to support flight software development in all areas
- Typical software risks apply
    - Good industry practices
    - Adequate test time
    - Adequate test resources
    - Adequate documentation

12.8 COST

All cost numbers are in FY 2005 dollars for easy comparison to earlier reports.

12.8.1 FLIGHT SOFTWARE COST

The Cost Model produced the 'most likely' cost value, which uses the software industry standard cost model COCOMO II as the underlying formula. The formula was calibrated with the historical cost data from a few JPL missions. The 'minimum' and 'maximum' cost numbers are obtained from the Team X cost distribution model. The last column, or the 'mean' cost number, is calculated by the simple formula: (min + max + most likely * 4)/6. This mean value is said to be the best estimate based on the Program Evaluation and Review Technique (PERT). These values are summarized below:

TABLE 41. SYSTEM FLIGHT SOFTWARE COST RANGE

NOTE: This table is not available for public release.

12.8.2 PROJECT SOFTWARE ENGINEERING COST

The estimated project level software engineering effort is 5% of the total of the FSW and GSW (ground software) development cost. The meaning of the 'most likely,' 'minimum,' 'maximum' and the 'mean' cost numbers are just like those described above for the FSW costs. These numbers are summarized below:

TABLE 42. SYSTEM PROJECT SOFTWARE ENGINEERING COST RANGE

NOTE: This table is not available for public release.

13 TELECOMMUNICATIONS

13.1 DESIGN REQUIREMENTS

- Mission lifetime: 5 years with 10 year goal
- Launch date: 2020
- Technology: Cutoff 2017
- Redundancy: Full
- Telemetry data rates: Ka-Band high rate downlink rate is 30 Mbps; Uplink rate is 2 kbps at X-Band
- Data volume: 844 Gbits/day
- Operating modes
    - Safe mode: Support 7.8125 bps uplink command rate and 10 bps downlink telemetry rate
    - Cruise mode: 2 kbps uplink and downlink
    - Science mode: 30Mbps downlink

13.2 DESIGN ASSUMPTIONS

- Heritage: JWST
- Technology: Updated SDST to handle high data rates and near-Earth frequency spectrum
- Communication frequencies:
    - X-band uplink
    - Ka-band downlink emergency
    - Ka-band downlink prime
- Communication data rates:
    - X-band uplink: 10 bps emergency to LGA, 2 kbps command to HGA
    - Ka-band downlink: 7 Mbps
- Modulation: Uplink is PCM/PSK/PM, Downlink: QPSK
- Solar range: 1.01 au
- Mechanisms: 2 axis gimbaled HGA
- Vendor-supplied components: SDSTs, Power amplifiers, HGA, LGAs diplexers, switches, cabling

13.3 DESIGN

- Equipment
    - Antennas: 0.5-m HGA (X/Ka-band), 1 Ka-Band LGA, 1 X-Band LGA
    - Transmitters/Receivers: Modified SDST (Small Deep Space Transponder)
    - Amplifiers: 5W Ka-Band SSPA (Solid State Power Amplifier)
- Frequencies
    - Uplink: X-Band
    - Downlink: Ka-Band
- Technology: Updated SDST, new Ka-Band SSPA
- Heritage: JWST
- Redundancy: Full

Uplink is from a 12m ground station at X-Band to either the HGA or LGA. The ground station transmitter power is 100 W. The receive data rate is 2 kbps through the HGA. Note that the max Earth-spacecraft range accounts for the L2 halo orbit (amplitude described in the Mission Design section).

TABLE 43. EARTH-CARRIER SPACECRAFT UPLINK DESIGN

NOTE: This table is not available for public release.

The downlink is at Ka-Band. The transmission data rate is 30 Mbps. The spacecraft uses a 0.5m HGA with a 5W power amplifier. A rate ½ LDPC code is used.

The research described in this document was carried out at the Jet Propulsion Laboratory, California Institute of Technology, under a contract with the National Aeronautics and Space Administration.

TABLE 44. CARRIER SPACECRAFT-EARTH DOWNLINK DESIGN

NOTE: This table is not available for public release.

13.3.1 CARRIER SPACECRAFT

The spacecraft is designed to provide two-way communications through all mission phases – launch, cruise and science. The spacecraft will support command, telemetry (engineering and science) and navigation – Doppler, ranging and DOR (differenced one-way ranging). The telecom system will include equipment to support the launch.

During cruise, the spacecraft will use an X-Band uplink and a Ka-Band downlink. Data return will be obtained using a high rate Ka-Band. This link will support a telemetry rate of 30 Mbps to a 2 element 12m antenna array at a range of 0.011AU. This link uses a rate ½ LDPC code. The uplink is nominally supported by a 12m antenna with a 100W transmitter. Note that the actual transmitter power for a 12m antenna will be determined by future technology enhancements. The command rate will be reduced when going through the LGA at max range.

The primary hardware on the spacecraft includes redundant X/Ka SDST transponders, 2 Ka-Band SSPAs, a 0.5m X/Ka articulated HGA, a Ka-Band transmit LGA, and 1 X-Band uplink LGA. Other spacecraft telecom equipment includes the following: the microwave components – diplexers, switches, filters, hybrids, waveguide and cabling.

Issues include the cost to. International standards on the appropriate usage of frequency bands states that spacecraft operating near Earth (within 2 million km) must use 26 GHz for communication. The antenna on the SAFIR spacecraft operates at 32 GHz Ka-band for downlink. Therefore, there will be a cost to modify the SDST to the near-Earth frequency band at 26 GHz.

This mission assumes technology that is available in this time frame.

13.3.1.1 Communications Modes

The telecom subsystem is designed to support all mission phases. It will use an X-Band uplink and a Ka-Band downlink. In the nominal case, the LGAs are used for launch and early cruise and the HGA is used for communications with the ground stations. In addition, the LGAs will be used for emergency communications. During the science phase, the Ka-Band telecom system with the HGA will be used for science telemetry return.

TABLE 45. CARRIER SPACECRAFT COMMUNICATIONS EQUIPMENT OPERATING MODES

Item	Units	Mode 1	Mode 2	Mode 3
Mode Name		**Cruise**	**Science**	**Safe**
HGA (X/Ka)	**-**			
Uplink (X band)	kbps	2	2	N/A
Downlink (Ka band)	kbps	30,000	30000	N/A
Power	W	5	5	N/A

The research described in this document was carried out at the Jet Propulsion Laboratory, California Institute of Technology, under a contract with the National Aeronautics and Space Administration.

LGA	-			
Uplink	kbps	2	N/A	.0078125
Downlink	kbps	2	N/A	.01
Power	W	5	N/A	5

13.3.1.2 Antennas

High Gain

- The HGA is a 0.5m, dual frequency, dual reflector antenna with a 2-axis gimbal. It operates at both X-Band for the uplink and Ka-Band for the downlink. It would be a new design. Its purpose is to support high rate telemetry return and commanding and navigation during outer cruise and during the science mission.
- Antenna type: Reflector
- Frequencies: X-band Uplink & Ka-band Downlink
- Articulation: 2 Axis Gimbaled
- Technology: Existing at the time
- Heritage: New

TABLE 46. CARRIER SPACECRAFT HIGH GAIN ANTENNA DESIGN

NOTE: This table is not available for public release.

Medium Gain: ***None***
Low Gain:
LGAs are body fixed.

- One Ka-band (transmit only) LGA used during Launch, Early Cruise phases and for emergency communications at a range less than 0.011 AU

- One X-band (receive only) LGA used to receive commands in all phases of the mission.

13.3.1.3 Receivers

The redundant receivers on the Carrier spacecraft are housed in the SDST transponders. They receive at X-Band.

TABLE 47. CARRIER SPACECRAFT RECEIVER DESIGN

NOTE: This table is not available for public release.

13.3.1.4 Transmitters

The transmitters for Ka-Band are housed in the transponders. They are exciters that have output powers around 20 mW. The signals feed the Ka-Band TWTAs.

TABLE 48. CARRIER SPACECRAFT TRANSMITTER DESIGN

NOTE: This table is not available for public release.

For Each SDST in X-up/Ka-down mode:

- Mass 2.7 kg & Power Consumption: 16 W

13.3.1.5 Amplifiers

This design uses a new Ka-Band 5W SSPA.

The research described in this document was carried out at the Jet Propulsion Laboratory, California Institute of Technology, under a contract with the National Aeronautics and Space Administration.

TABLE 49. CARRIER SPACECRAFT AMPLIFIER DESIGN

NOTE: This table is not available for public release.

13.3.1.6 Block Diagram

FIGURE 19. TELECOM BLOCK DIAGRAM

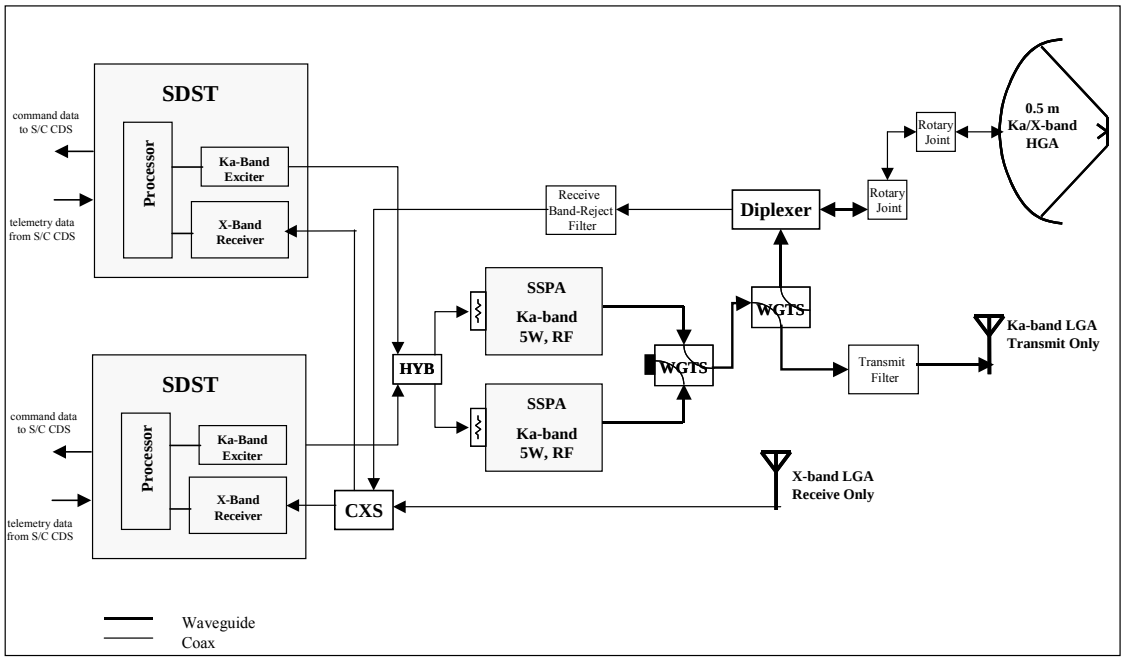

13.4 TRADES

13.4.1.1 Low vs. High Transmit Data Rate

- The Baseline data rate was set at 7 Mbps. Using the same spacecraft telecom system and assuming an 8 hour pass per day requires one 12m Ka-band station on Earth for a successful data downlink.
- Increasing the data volume and therefore the data rate to 30 Mbps and keeping the same spacecraft telecom system and the 8-hour pass per day requires arraying of two 12m Ka-band station on Earth for a successful data downlink.

13.5 TECHNOLOGY

Table 50. Telecom Technology Overview

Subassembly	Technology Type	Metrics (Performance measurement)	TRL	Criticality (Mission Critical, Enabling, Enhancing)	Comments
X-Band Transponder	Transponder	Radiation	9	Critical	
Ka-band SSPA, 5W RF	Solid State Amplifier	Radiation, power and mass	7	Critical	

13.6 PLANETARY PROTECTION

Not applicable

The research described in this document was carried out at the Jet Propulsion Laboratory, California Institute of Technology, under a contract with the National Aeronautics and Space Administration.

13.7 RISK

None

13.8 COST

TABLE 51. TELECOM COST BREAKDOWN

NOTE: This table is not available for public release.

Cost Assumptions:

- The cost includes one spare for each component excluding the HGA.
- No Environmental Tests, including No Vibration tests, No Thermal Vac. tests, No EMI/EMC tests will be performed at JPL; it is assumed that they are all done at the vendor. If Mission Assurance requires that these tests will be repeated on the whole telecom system at JPL (this decision depends highly on how the telecom payload is delivered to ATLO), the cost of the testing and facilities and the paperwork should be added.
- Assuming JIMO has paid for LDPC code (rate 1/2) + GMSK modulation cost (~$3M NRE). In addition, the SDST would need to be procured.
- Planetary protection cost is not included
- Mission Assurance cost is not included
- The ATLO Support at JPL & KSC. MOS/GDS and Schedule Reserves and the transition to ATLO operation training and baseline tests are not included.
    - Fit Check Templates cost for each telecom component however is included in the cost.
- Very limited cost for traveling is included.
- No additional cost was added for modifying the SDSTs. A next generation transponder of the SDST should be available for JIMO (2015), which will be able to provide 10 Mb/sec, thus the 7 Mb/sec data rate would be achievable with this. QPSK is the baseline modulation format.

The research described in this document was carried out at the Jet Propulsion Laboratory, California Institute of Technology, under a contract with the National Aeronautics and Space Administration.

14 GROUND SYSTEMS

14.1 DESIGN REQUIREMENTS

- Mission Class: SAFIR is a Class A mission
- Heritage: SIRTF, Herschel and JWST heritage.
- Launch Date: ~2020
- Mission Duration: 5 year floor, 10 year goal
- Destination: Lissajous orbit about L2.
- The science instrumentation consists of an imager and spectrometer packages.

14.2 DESIGN ASSUMPTIONS

14.2.1 MISSION OPERATIONS CONCEPT ASSUMPTIONS

- Heritage for the mission is SIRTF, JWST, Herschel.
- Instruments are imager and spectrometer, Eschelle or waveguide grating with bolometer arrays.
- Data volume for study was 140Gb over 2 days. The data rate was limited by thermal aspects of operating the instruments.
- Complexity: The mission is considered extremely complex.

14.2.2 TECHNOLOGY AVAILABILITY ASSUMPTIONS

- The DSN is expected to expand ground reception capabilities to meet the planned mission needs during the mission timeframe. The likely forms of expansion are the deployment of optical communications ground stations, additional large antennas, and large arrays of small antennas, providing reception capability better than the current 70 m stations. These arrays can be expanded economically to support the needs of all missions in this timeframe.
    - For this mission this means being able to communicate using smaller stations with greater availability than what is currently available, thereby reducing operating costs and risk.
    - Optical communications may be available but could be overkill for this mission (unless significantly higher data return rate is desired than what was required in the study).
- GDS changes would be evolutionary in nature from the current technology. Looking at how things have changed from missions designed 15 years ago to the present, it is reasonable to expect more automated tools for planning and design; however, the labor savings does not materialize because missions have grown more complicated, thereby requiring the new technology just to meet the mission needs. The end result is that the development and operations for this mission would be at least on the order of a SIRTF type mission.

14.3 DESIGN

In general, all operations would be handled through JPL. There will need to be a Data Processing & Distribution Center (i.e. a Science Operations Center) to coordinate all science operations and plans, which nominally is centralized at JPL but could be anywhere, and may have multiple centers. Alongside the science operations center, there will need to be a Mission Operations Control Center (i.e. a spacecraft operations center).

Figure 20 below presents the general data flow for this mission. Note that TMOD (Telecommunications and Mission Operations Directorate) is the old name for what should now be called Deep Space Mission Systems.

The research described in this document was carried out at the Jet Propulsion Laboratory, California Institute of Technology, under a contract with the National Aeronautics and Space Administration.

FIGURE 20. GROUND DATA SYSTEM BLOCK DIAGRAM

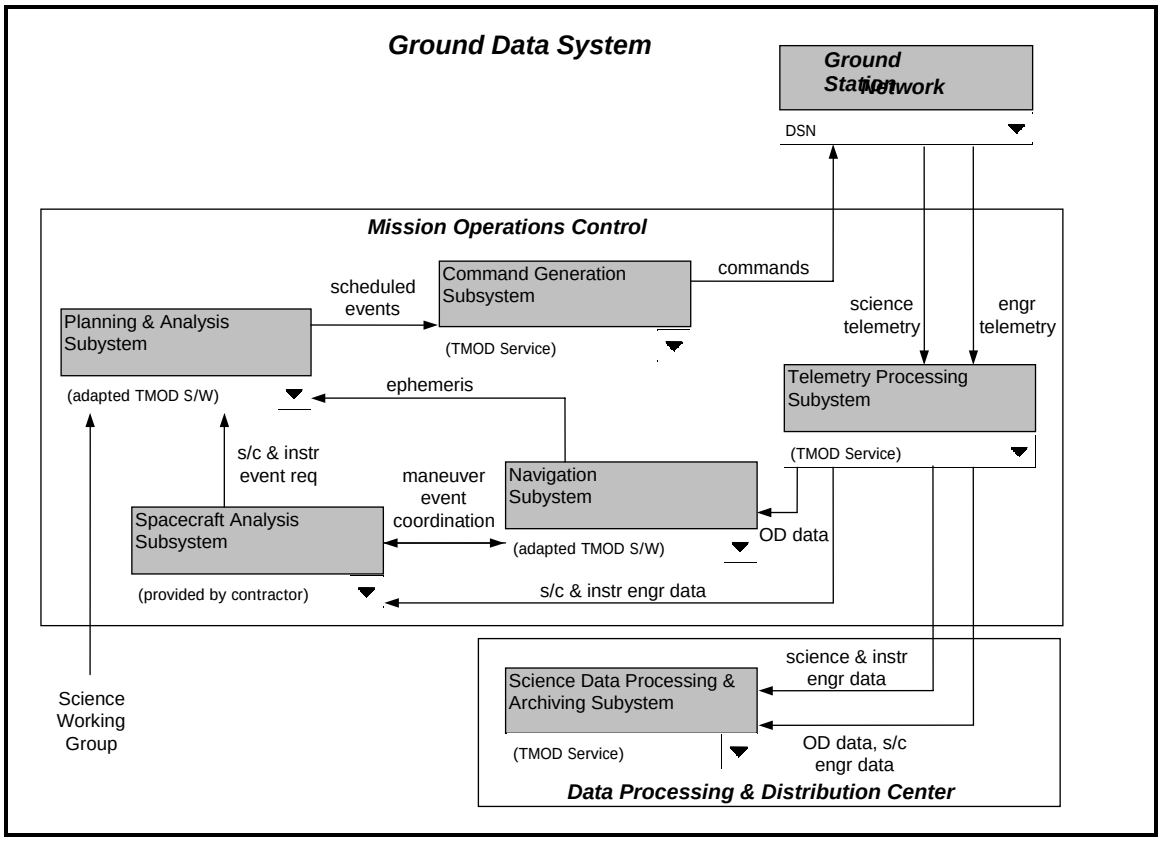

14.3.1 CRUISE OPERATIONS

This mission has cruise duration of two months to the L2 position. This requires a complete and operational MOS at launch, as there is no time for development post-launch.

Cruise operations will be light. There will be a post launch checkout. There will be the nominal continuous tracking for the first two weeks, 14-18 tracks per week to perform nominal health and navigation checks the next 2 weeks, and 3 tracks per week for the second month. There will be a total of 4 TCMs during the cruise period.

14.3.1.1 Commanding

During cruise, commanding will be no different during the science operations period with a standard uplink once per week.

14.3.1.2 Data Return

There is no science conducted during cruise. Telemetry data return during cruise will be handled by the 3 weekly passes.

The research described in this document was carried out at the Jet Propulsion Laboratory, California Institute of Technology, under a contract with the National Aeronautics and Space Administration.

14.3.1.3 DSN Tracking and Scheduling

TABLE 52. DSN TRACKING PROFILE

Mission Activity	Antenna Size	Service Year	Hours/track	Tracks/week	Required weeks
Units	Meters	year	hr	Tracks/week	Week
Launch and Early Operations	1-3 12m Antenna Array	2020	Continuous	Continuous	2
Check out and early cruise	1-3 12m Antenna Array	2020	8	14-18	2
Health & Navigation & late cruise	1-3 12m Antenna Array	2020	8	3	4

14.3.2 SCIENCE OPERATIONS

TABLE 53. FORWARD LINK STRATEGY FROM EARTH TO ORBITER

Parameter	Unit	Value
Uplink per day	Uplinks/day	1
Uplink Data volume	Bytes/uplink	Not available

TABLE 54. RETURN LINK STRATEGY FROM ORBITER TO EARTH

Parameter	Unit	Value
Downlinks per day	downlinks/day	1
Downlink Data volume	Bits/downlink	70 Gb
Onboard Storage	Gb	256
Data dumps	#/day	1
Receive antenna	-	1-3 12m Antenna Array
S/C data destination	-	JPL
Maximum time lag between data dump and destination	min	Minutes

14.3.2.1 Commanding

During cruise, commanding will be no different during the science operations period with a standard uplink once per week.

14.3.2.2 Data Return

The science mission is based on the operation of the telescope, an imager and HRS and HET package. The data volume from these instruments was determined to be 140 Gb over 2 days. This volume was based on the operation of at most two instruments at a time, due to thermal limitations. If all instruments were used concurrently, the maximum data rate could be as high as 844 Gb per day The telecom system was sized to handle either rate.

The research described in this document was carried out at the Jet Propulsion Laboratory, California Institute of Technology, under a contract with the National Aeronautics and Space Administration.

To return this science data to Earth, the return link will be 30 Mbps Ka band in a single 8 hour pass per day. This return link will require an array of 1-3 12meter ground stations. The forward link is 2 kbps using X-band.

The science operations strategy will have an effect on the development of the MOS and GDS. The more instruments operational at the same time will add complexity to the sequencing and interaction of the operational flight teams. The models used to reflect SIRTF operations include increased cost due to the late addition of the MOS Design to the project and the complicated interaction of the Science Operations Center and the DSMS provided services.

14.3.2.3 DSN Tracking and Scheduling

TABLE 55. DSN TRACKING PROFILE

Mission Activity	Antenna Size	Service Year	Hours/track	Tracks/week	Required weeks
Units	Meters	year	hr	Tracks/week	Week
Science & Health	1-3 12m Antenna Array	2020	8	7	260

14.4 TRADES

At this point in the study there are not many trades to be done. Several items need to be developed by the study team. The initial inclusion of MOS design, and the overall MOS organization structure and interface design are of great importance to the complexity and cost of the MOS development. In addition, with the launch about 15 years off, the DSN trades cannot be seriously pursued.

14.5 TECHNOLOGY

Advances in GDS systems and Flight software are reasonable to expect but at this stage difficult to predict. Evolutionary trends imply that ever-increasing spacecraft autonomy is expected, as are improvements in MOS design. In addition, the mission goals may be modified/enhanced, which would require improved capabilities just to meet the goals. Typically, the end result is that efforts to develop or operate the improved MOS are on the same order as the current MOS. The primary difference is that more science is collected and returned.

TABLE 56. GROUND SYSTEMS TECHNOLOGY OVERVIEW

Subsystem	Technology Type	Metrics (Performance measurement)	TRL	Criticality (Mission Critical, Enabling, Enhancing)	Comments
Ground Systems	12m antenna array	S/N ratio	N/A	Enhancing	Arrayed smaller apertures permit more economical tracking than single large antennas

14.6 RISK

The research described in this document was carried out at the Jet Propulsion Laboratory, California Institute of Technology, under a contract with the National Aeronautics and Space Administration.

By design risks are intended to be low.

14.7 COST

TABLE 57. GROUND SYSTEMS COST BREAKDOWN

NOTE: This table is not available for public release.

The costs for this study were using the assumptions of a large SIRTF type mission. The JWST and Herschel missions are not mature enough to factor in. The major driver to the SIRTF costs were a result of the development organization structure that hindered effective end-to-end MOS design early and the resulting late MOS re-planning and development in the development phase. The early MOS initiation is most important on this type of mission where the entire MOS must be ready and operational at launch, with no delayed development allowed.

The research described in this document was carried out at the Jet Propulsion Laboratory, California Institute of Technology, under a contract with the National Aeronautics and Space Administration.

15 MISSION ASSURANCE & SAFETY

15.1 MISSION RISK

The affected Subsystem Engineers scored the risks identified for this study for impact and likelihood. No red/high risks were identified for this mission. However, major concerns during the design process included the issues associated with taking measurements, such as cooling of the instruments and mirror, and pointing stability. The following charts provide an overview of mission and programmatic risks that were identified by the sub-system engineers throughout the study.

15.1.1 FEVER CHART

Each risk is scored by the sub-systems that are affected by it and subsequently given a final score by the Risk and Systems engineers. Risks scored as green have a low overall risk level; risks scored as yellow have a medium overall risk level; risks scored as red have a high overall risk level and should be watched. The table located below shows the number of risks in each category, for a description of the Fever Chart labels, please refer to the end of the Mission Risk section.

TABLE 58. FEVER CHART

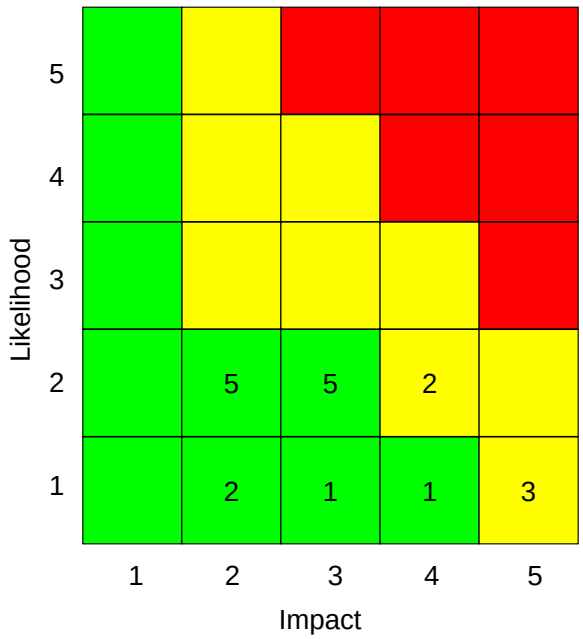

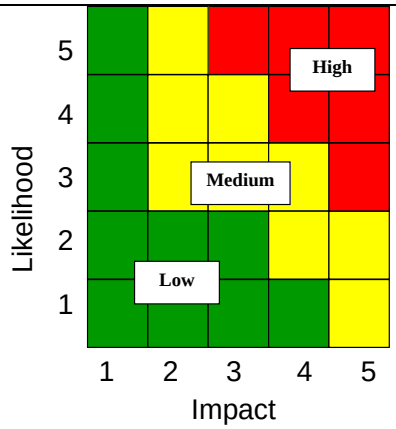

Impact:

Level	Mission Risk Definitions
5	Mission Failure
4	Significant reduction in mission return
3	Moderate reduction in mission return
2	Small reduction in mission return
1	Minimal (or no) impact to mission

Likelihood of Occurrence:

Level	Level Definition
5	Very High, >70
4	High, >50%
3	Moderate, >30%
2	Low, >1%
1	Very low, <1%

The research described in this document was carried out at the Jet Propulsion Laboratory, California Institute of Technology, under a contract with the National Aeronautics and Space Administration.

FIGURE 21. RISK DEFINITIONS

15.1.2 RISK OVERVIEW

The following table expands on the details of each risk and shows mitigated scores where applicable. Note that the majority of the risks are low.

Table 59. Risk Overview

Risk	Level	Description	Impact	Likelihood	Mitigation	Mitigated Impact	Mitigated Likelihood
Detector technology not yet flown	M	Detector technology is not yet mature. Would need to be there for proper science measurement taking	4	2			
Turbo Brayton coolers	M	Vibrational issues and proper temperature control issues	4	2			
Stray light	M	Stray light coming into sidelobes of instruments from reflection off of moon or earth	5	1			
Maintaining stable temps during measurements	M	There is going to be a large thermal load and requires lots of power to maintain	5	1			
Maintaining 0.1K for all instrument focal planes	M	Critical for measurements	5	1			
Dependence on JWST success	L	JWST not flying will push back development for this mission	3	2			
Continuous Adiabatic Demagnetization Refrigerator	L	Not fully developed yet but should be ready in time. Failure of this system would raise temperature	3	2			
Complex movements and deployments	L	Requires unique mechanical attachment techniques	3	2			
Low temperature properties	L	At very low temperatures, there is less reliable data on how system will behave	3	2			
Coordinating with thermal shields	L	Make sure that telescope and instruments don't incidentally get hot	4	1			
Pointing constraints	L	Long observations require very good pointing accuracy	2	2			
Sunshield coating material issues	L	Low absorptance coating on a durable material is required	2	2			
Interface between payload and s/c	L	Potential that some observations will be missed and issues with heat transfer between payload and spacecraft	2	2			
Tipping spacecraft for TCMs	L	Stray light into the instruments and uneven heating of sunshields	2	2			

The research described in this document was carried out at the Jet Propulsion Laboratory, California Institute of Technology, under a contract with the National Aeronautics and Space Administration.

Transferring heat evenly at each stage	L	Large 10 m mirror has to be cooled efficiently	2	2			
Structure too big to test prior to launch	L	Need to be able to test technology before it can fly	3	5	Build an appropriate facility	2	1
Larger mirrors than JWST	L	A facility would need to be developed for the construction and testing	3	1	Build an appropriate facility	2	1
TCM 1	L	Have 2 day window to do burn	3	1	Alternate Maneuver	2	1

15.2 SUBSYSTEM RISKS

The following are the descriptions and assessments by the Subsystem Engineers for each of the risk items listed in the figures above. In some cases, a risk description and/or mitigation is also provided. The risks are presented in order from highest to lowest risk. For this study, there were no high/red risks identified, 6 medium/yellow risks, and 10 low/green risks.

15.2.1 MEDIUM RISKS

Risk Name: Detector technology not yet flown

Description: Detectors technology not yet mature. Would need to be there for proper science measurement taking

Sub-system scores:

	Impact	Likelihood	Comments
Instruments	4	1	New Technology, its at TRL 3
Programmatics	3	3	
Systems	2	2	Assumption is that this technology will be developed prior to launch.
Overall Risk	4	2	Low TRLs

Risk Name: Turbo Brayton coolers

Description: Vibrational issues and proper temp control issues

Sub-system scores:

The research described in this document was carried out at the Jet Propulsion Laboratory, California Institute of Technology, under a contract with the National Aeronautics and Space Administration.

	Impact	Likelihood	Comments
Instruments	5	1	Temp control needed for proper observations
Thermal	3	2	- Cooling performance at 4, 15, and 40 K --> Design and test with updated values (Change in original assumptions will re-size SC) -Vibration issues
Overall Risk	4	2	

Risk Name: Stray light

Description: Stray light coming into sidelobes of instruments from reflection off of moon or earth

Sub-system scores:

	Impact	Likelihood	Comments
Instruments	5	1	Obliterate observations if stray light gets in
Overall Risk	5	1	

Risk Name: Maintaining stable temps during measurements

Description: There is going to be a large thermal load and requires lots of power to maintain

Sub-system scores:

	Impact	Likelihood	Comments
Instruments	5	1	Critical for measurements
Systems	5	1	Temperature stability is very important but once it is achieved the probability of issue is slim.
Thermal	2	3	Design for stable temperatures (Measurement sensitivity?) -Large mirror
Overall Risk	5	1	

The research described in this document was carried out at the Jet Propulsion Laboratory, California Institute of Technology, under a contract with the National Aeronautics and Space Administration.

Risk Name: Maintaining 0.1K for all instrument focal planes

Description: Critical for measurements

Sub-system scores:

	Impact	Likelihood	Comments
Instrument	5	1	Measurement requirement
Thermal	2	2	ADR is new technology -Cooling capability? (Mass, power) --> Testing to mitigate the unknowns and design for discrepancy
Overall Risk	5	1	

Risk Name: Dependence on JWST success

Description: JWST not flying will push back development for this mission

Sub-system scores:

	Impact	Likelihood	Comments
Instruments	5	2	
Programmatics	4	3	
Systems	1	1	Study assumed JWST sucess.
Overall Risk	3	2	

Risk Name: Continuous Adiabatic Demagnetization Refrigerator

Description: Not fully developed yet but should be ready in time. Failure of this system would raise temperature

Sub-system scores:

	Impact	Likelihood	Comments
Instruments	5	1	Failure of this does not allow proper temperature to be maintained
Systems	2	2	New Technology... assumed to be completed prior to PDR
Thermal	2	3	-new technology risk -not working will cause the coldest point to be 4 K (not 0.1

The research described in this document was carried out at the Jet Propulsion Laboratory, California Institute of Technology, under a contract with the National Aeronautics and Space Administration.

			K)
Overall Risk	3	2	

Risk Name: Complex movements and deployments

Description: Requires unique mechanical attachment techniques

Sub-system scores:

	Impact	**Likelihood**	**Comments**
Instrument	5	1	Proper deployment of sunshield and mirrors
Systems	3	3	large number of deployments increase possibility of failure
Overall Risk	3	2	

Risk Name: Low temperature properties

Description: At very low temperatures, there is less reliable data on how system will behave

Sub-system scores:

	Impact	**Likelihood**	**Comments**
Thermal	3	2	testing will provide insight into structural, mechanical, thermal, optical propeties
Overall Risk	3	2	

Risk Name: Coordinating with thermal shields

Description: Make sure that telescope and instruments don't incidentally get hot

Sub-system scores:

	Impact	**Likelihood**	**Comments**
Instrument	5	1	Coordination between thermal shields and instruments is critical because you dont want to get any thermal radiation into the telescope. Could lose observations
Thermal	3	1	Impact of instrument on shield effectiveness --> use mechanical models and configuration to design for

The research described in this document was carried out at the Jet Propulsion Laboratory, California Institute of Technology, under a contract with the National Aeronautics and Space Administration.

			these interactions (material property testing and thermal testing will be important)
Overall Risk	4	1	

Risk Name: Pointing constraints

Description: Long observations require very good pointing accuracy

Sub-system scores:

	Impact	**Likelihood**	**Comments**
Instrument	2	2	Must be able to maintain pointing constraints for long dwell times
Overall Risk	2	2	Constraints are very tight (few arc seconds). Scan rates need to be very slow to minimize settling time. First point spacecraft then instrument fine pointing would follow. Long duration measurements will be very difficult for spacecraft to maintain

---

Risk Name: Sunshield coating material issues

Description: Low absorptance coating on a durable material is required

Sub-system scores:

	Impact	**Likelihood**	**Comments**
Thermal	2	2	-contamination issues -->processing to minimize ground contamination, and propulsion/venting configuration to minimize on-orbit contamination -material properties -->test for latest values
Overall Risk	2	2	

Risk Name: Interface between payload and s/c

The research described in this document was carried out at the Jet Propulsion Laboratory, California Institute of Technology, under a contract with the National Aeronautics and Space Administration.

Description: Potential that some observations will be missed and issues with heat transfer between payload and spacecraft

Sub-system scores:

	Impact	**Likelihood**	**Comments**
Instruments	1	1	Potentially miss observations
Systems	3	3	Fluid loops, data, and power, thermally isolated
Overall Risk	2	2	

Risk Name: Tipping spacecraft for TCMs

Description: Stray light into the instruments and uneven heating of sunshields

Sub-system scores:

	Impact	**Likelihood**	**Comments**
Instruments	2	3	Effects stray light and temperature
Thermal	4	1	Any solar loading onto the sunshield will warm up quickly, requiring long time to cool again. Design to minimize incidence (likelihood)
Overall Risk	2	2	

Risk Name: Transferring heat evenly at each stage

Description: Large 10 m mirror has to be cooled efficiently

Sub-system scores:

	Impact	**Likelihood**	**Comments**
Systems	3	3	Significant fluid loops throughout the telescope.
Thermal	2	2	Design to eliminate gradients
Overall Risk	2	2	

Risk Name: Structure too big to test prior to launch

The research described in this document was carried out at the Jet Propulsion Laboratory, California Institute of Technology, under a contract with the National Aeronautics and Space Administration.

Description: Need to be able to test technology before it can fly

Sub-system scores:

	Impact	Likelihood	Comments
Programmatics	3	5	
Systems	3	5	Fully deployed structure will not fit in existing Thermal - Vac chamber (even Plumbrook)
Overall Risk	3	5	

Mitigations:

	Reduced Impact	Reduced Likelihood	Mitigation
Programmatics	1	1	Build/Obtain appropriate facility
Systems	1	1	New testing facilities
Overall Risk	2	1	Going to be very expensive to build

Risk Name: Larger mirrors than JWST

Description: A facility would need to be developed for the construction and testing

Sub-system scores:

	Impact	Likelihood	Comments
Instruments	5	2	New Technology needs to be tested. So big its hard to test
Systems	3	2	Current plan for HARD deployable mirror array scales to 10m.
Overall Risk	3	1	

Mitigations:

	Reduced Impact	Reduced Likelihood	Mitigation
Instruments	3	1	Build an appropriate facility
Overall Risk	2	1	Build an appropriate facility

The research described in this document was carried out at the Jet Propulsion Laboratory, California Institute of Technology, under a contract with the National Aeronautics and Space Administration.

Risk Name: TCM 1

Description: Have 2-day window to do burn for orbit injection

Sub-system scores:

	Impact	Likelihood	Comments
Mission Design	4	1	Likelihood low, but its expensive if it happens
Systems	2	2	Minimal problem, JPL has plenty of experience with TCM's on time critical schedules.
Overall Risk	3	1	

Mitigations:

	Reduced Impact	Reduced Likelihood	Mitigation
Mission Design	2	1	Schedule an alternate maneuver
Overall Risk	2	1	Alternate maneuver

15.2.2 MISSION ASSURANCE

15.2.2.1 System resilience

The Carrier spacecraft has full redundancy built into it.

15.2.2.2 Maintenance or servicing

No on orbit servicing is required for this mission. During the 5-10 year mission life, likely maintenance will include updates for flight software and planning for science of opportunity.

15.2.2.3 Launch and near-Earth operations

Only one launch on a Delta IV Heavy is required for this spacecraft. The near-Earth operations will consist of light post-launch checkout, with continuous ground tracking for the first 2 weeks. At 1 day after launch, the spacecraft's chemical propulsion system inserts it into a direct trajectory to L2.

15.2.2.4 Mission disposal

For the short-term future the spacecraft will remain near the L2 point, but the orbit is unstable without maintenance and the longevity of the orbit is still to be determined. The spacecraft will eventually enter a classical heliospheric orbit. It is not anticipated that this will have any impact on other spacecraft not in orbit around L2.

15.2.3 PLANETARY PROTECTION

Not applicable.

The research described in this document was carried out at the Jet Propulsion Laboratory, California Institute of Technology, under a contract with the National Aeronautics and Space Administration.

16 COST

16.1 DESIGN REQUIREMENTS

- Study Overview
  - The Single Aperture Far-Infrared Observatory (SAFIR) studies involve launching a large cryogenic space telescope to a Lissajous about L2 orbit. The telescope will be capable of covering the gaps between infrared wavelengths scanned with the James Webb Space telescope (JWST) and the microwave wavelengths observable with telescopes on the ground.
  - SAFIR will study the earliest phases of forming galaxies, stars, and planetary systems at wavelengths from 20 microns to one millimeter
  - 10 m mirror cooled to 4 K, with detectors < 0.1 K
- Assumed heritage from JWST, SIRTF & Herschel missions
- Mission Class A
- Mission duration shall be 5 years with a 10 year goal.
- The spacecraft is considered fully redundant except for specifics identified by the representative subsystem.
- Approximate Launch date ~2020
- Location for assembly is unknown at this point.
- Industry will supply the instruments.
- This mission is not cost capped.
- All costs are calculated in FY 2005
- Sparring strategy: Selected

16.1.1 DESIGN ASSUMPTIONS

- Technology cutoff will occur in 2013 with a minimum TRL of 6 at the end of Phase B
- Schedule Information – Note that no specific launch date outside of approximate year was chosen so an assumed date of July 1st, 2023 was selected so the start of Phase A coincided with the client's request of January of 2011. Refer to the tables below for detailed schedule data outlining phase durations along with projected start and end dates.

TABLE 60. PHASE DURATION, START AND END DATES

Phase A Length	Months	**24**
Phase B Length	Months	**42**
Phase C Length	Months	**48**
Phase C Design	Months	**24**
Phase C Fabrication	Months	**12**
Phase C Subsystem I&T	Months	**12**
Phase D	Months	**36**
Phase D System I&T	Months	**31**
Phase D Launch Operations	Months	**5**
Phase E Length	Months	**59**
Launch Date		**01 Jul 2023**
S/C Commissioning Length	Days	**30**

	Start	End
Phase A	**29 Jan 2011**	**28 Jan 2013**
Phase B Start	**28 Jan 2013**	**30 Jul 2016**
Phase C Start	**30 Jul 2016**	
Design Start	**30 Jul 2016**	**30 Jul 2018**
Fabrication Start	**30 Jul 2018**	**31 Jul 2019**
Subsystem I&T Start	**31 Jul 2019**	**30 Jul 2020**
Phase D Start	**30 Jul 2020**	
System I&T Start	**30 Jul 2020**	**28 Feb 2023**
Launch Operations Start	**28 Feb 2023**	**31 Jul 2023**
Phase D End		**31 Jul 2023**
Phase E Start	**31 Jul 2023**	**29 Jun 2028**

- The following table represents the rates and factors used to determine parametrically derived costs

The research described in this document was carried out at the Jet Propulsion Laboratory, California Institute of Technology, under a contract with the National Aeronautics and Space Administration.

TABLE 61. PARAMETRIC COST PERCENTAGES

Costing Element	Percentage	Notes
Operations Management Percent	10.00%	% Phase E Cost less Reserve
Payload Management Percent	2.00%	% of payload cost
Payload Engineering Percent	2.00%	% of payload cost
Project Management Percentage	2.80%	% Phase A-D Cost less Reserve
Education & Public Outreach Fraction	1.00%	% of Total Mission less LV and All Reserves
Education & Public Outreach Pre-Launch Percentage	25.00%	% of EPOR percentage above allocated prior to launch
Development Mission Assurance %	5.90%	% Phase A-D Cost less Mgmt & Reserve
Operations Mission Assurance %	1.00%	% Phase E Cost less Mgmt & Reserve
Reserve Strategy		
Phase A/B Reserves	30.00%	
Phase C/D Reserves	30.00%	
Phase E Reserves	15.00%	

- The Development Mission Assurance percentage was set to 5.9% of Phase A-D costs less management and reserves based upon cost team experience from MER and Cassini.
- Costs for V-Groove Radiator and ACTDP Coolers were provided by the customer. NOTE: These cost values are not available for public release.
- Thermal costs are expected to be high due to long life expectancy and high performance goals of the active cooling system.
- Assumed spares and associated cost savings from JWST, SIRTF and Herschel do not apply to structures primarily due to the larger sunshield, the larger aperture and cryogenic operating temperatures far below those previous missions.

16.1.2 COST SUMMARY

- The expected mission cost equals $2,440M with a range from $2,196M - $2,927M. The range represents a minimum, calculated as the expected mission cost less 10%, and a maximum, calculated as the expected mission cost plus 20%. Team X cost estimations, when compared to historical studies, are accurate within this range.

TABLE 62. PROJECT COST RANGE

NOTE: This table is not available for public release.

- It should be noted that Team X cost models estimate missions based on current or near term technology (5-8 years out) and do not account for technology development costs beyond that. As a result, an estimate for technology development along with assembly, test and launch operations of $250M was added. This may not be correct due to emerging technologies over the next 15 years. Expanding the cost range to minus 25% to plus 30% would be more prudent for this kind of mission considering the level of uncertainty across the board.
- Science was estimated as a lean competed mission, thus producing level 0/1 data products. As a result, an additional $40M for a Science Center was added under the total for Phase E.
- Spacecraft mass was identified as ~ 7000 kg. Thus the launch vehicle selection was iterative. The Delta IV 4050H, whose cost is $218.2M FY 2005, was ultimately selected
- Launch vehicle costs are available from recent NASA AO's
- Major cost drivers for the SAFIR Vision Mission include:

The research described in this document was carried out at the Jet Propulsion Laboratory, California Institute of Technology, under a contract with the National Aeronautics and Space Administration.

- Instrument package, estimated parametrically by mass ratio
- Thermal systems
- Structures and mechanisms

- The following table represents a high level cost comparison between SAFIR Vision Mission and SIRTF across the phases of the missions. Note that since SIRTF is still underway, Phase E costs are not complete.

TABLE 63. PROJECT PHASE COST COMPARISON

NOTE: This table is not available for public release.

- Both the SAFIR and SIRTF missions share the fundamental design of a cryogenically cooled orbiting telescope designed for infrared imaging. The difference, however, is that SAFIR will exceed SIRTF in many areas such as mass, cryogenic technology and mission life.
  - Estimated launch mass for SAFIR is ~ 7000 kg vs. SIRTF at 950 kg
  - Operating temperature for SAFIR telescope optics is 4 K (focal plane at 0.1 K) vs. SIRTF at 35 K
  - Mission duration for SAFIR is 5 yrs (min) with a 10 yr goal vs. SIRTF with 2.5 yrs (min) with a 5 yr goal.

The research described in this document was carried out at the Jet Propulsion Laboratory, California Institute of Technology, under a contract with the National Aeronautics and Space Administration.

16.1.2.1 Project Cost Summary

- The following table represents the project cost summary.

TABLE 64. PROJECT COST SUMMARY

NOTE: This table is not available for public release.

- The following table represents the project budget.

TABLE 65. PROJECT BUDGET ACROSS SCHEDULE

NOTE: This table is not available for public release.

- Inflation is assumed to be constant at 3.1%. If this changes over the course of the project then the projected cost in real years will change drastically.
- The following graph represents the funding profile across the projected schedule. Note that the inflation rate is held constant at 3.1% and will dramatically influence the funding profile if altered.

TABLE 66. MISSION FUNDING PROFILE

NOTE: This table is not available for public release.

16.1.2.2 Element Cost Summary

- The following table represents the element cost summary.

TABLE 67. ELEMENT COST SUMMARY

NOTE: This table is not available for public release.

16.1.3 RISK

Cost risk was not addressed during this study.

16.1.4 CONCLUSION

- The level of variance for the cost of this mission is very high due to the difficulty associated with estimating the affect new technologies will have on the development of the mission.
- Minimum and maximum cost percentages should be expanded to account for future technology development impacts (or the lack thereof)

The research described in this document was carried out at the Jet Propulsion Laboratory, California Institute of Technology, under a contract with the National Aeronautics and Space Administration.

17 TECHNOLOGY

The following table represents a summary of key technologies for this mission. Technologies are identified along with performance metrics and mission impact criticality). See the individual subsystem sections for more specific information.

TABLE 68. MISSION TECHNOLOGY OVERVIEW

Subsystem	Technology Type	Metrics (Performance measurement)	TRL	Criticality	Comments
Science	Sunshade	Maintain constant temperature on telescope, provide shielding from stray light	3	Enabling	On the Carrier spacecraft. The primary benefit is that the technology is enabling. The disadvantage is size. The heritage is from Spitzer.
	10m aperture	Throughput Diffraction Limit	4		On the telescope. The main disadvantage is volume and mass. Telescope optics. The heritage is ST.
	Mirror Surface Control	Focus	4		On the telescope. The main disadvantage is that active control is required. The heritage is NGST.
	Mirror Material	Mass reduction	3		On the telescope. The heritage is NGST.
	Optical design	Fine Pointing correction	4		On the telescope. The main disadvantage is that off-axis, active control is needed. The heritage is NGST.
	Detectors – Large format IR	Increased measurement fidelity (resolution, data quality)	2	Enabling	On the telescope. The main disadvantage is that this is a new technology with high risk and high sensitivity requirements.
	Telescope Deployment and Latching Stability	Extremely high mechanical rigidity/stability (absolutely no movement)	4	Enhancing	Current systems can provide latching mechanisms at reduced stability
	Autonomous Docking & Robotic Assembly	Reduced cost, risk with regard to manned assembly	4	Enhancing	

The research described in this document was carried out at the Jet Propulsion Laboratory, California Institute of Technology, under a contract with the National Aeronautics and Space Administration.

Instruments	NA	NA	NA	NA	NA
Mission Design	NA	NA	NA	NA	NA
Systems	See Systems Section	NA	NA	NA	NA
Structures	Primary mirror deployment & latch	Mirror surface accuracy	2	Critical	
	Telescope positioning & pointing boom	Pointing accuracy, stability, robustness	4	Critical	
Thermal	Sunshield	Size, mass, temperature	2	Enabling	
	Cryocoolers	Efficiency, weight, power usage	3	Enabling	
Power	Multi-junction	Efficiency	4	Enhancing	
Propulsion	Ultralight composite propellant tanks	50% Less Mass	4	Enhancing	
ACS	Fine Guidance Sensor	Increased pointing accuracy and stability	2	Enabling	Need to incorporate a sensor with the telescope to provide required knowledge for spacecraft attitude control
CDS	NA	NA	NA	NA	NA
Software	CPU	-	-	Enhancing	Assumed heritage From JWST
Telecom	X-Band Transponder	Radiation	9	Critical	
	Ka-band SSPA, 5W RF	Radiation, power and mass	7	Critical	
Ground Systems	12m antenna array	S/N ratio	N/A	Enhancing	Arrayed smaller apertures permit more economical tracking than single large antennas
Programmatics	NA	NA	NA	NA	NA
Cost	NA	NA	NA	NA	NA

The research described in this document was carried out at the Jet Propulsion Laboratory, California Institute of Technology, under a contract with the National Aeronautics and Space Administration.